25W Multiple-Stage Output Current LED Power Supply LCM-25DA series

TAIWAN EXCELLENCE 2014

Features

- Output current level selectable by DIP S.W.
- 180~277VAC input only
- Built-in active PFC function
- Protections: Short circuit / Over temperature
- Cooling by free air convection
- Fully isolated plastic case
- Class Ⅱ power unit, no FG
- Built-in DALI interface and push dimming function
- IP20 design
- No load power consumption <0.5W(Note.7)
- Power supplies synchronization function up to 10 units
- 3 years warranty

Applications

- Indoor LED lighting
- Office LED lighting
- LED decorative lighting

Description

LCM-25DA is a 25Watts LED power supply that one single unit supplies multiple current levels, 350mA/500mA/600mA/700mA/900mA/1050mA. The current levels are easily switched by adjusting the built-in DIP switch. LCM-25DA also provides the dimming function that control by push dimming or DAIL signal. Moreover, the synchronization design allows the dimming for up to 10 units of LCM-25DA to be controlled simultaneously.

Model Encoding

LCM - 25DA

- DALI version
- Output power
- Series name

MeanWell Direct
Tel: +44 (0)118 970 3858 E-mail: sales@meanwelldirect.co.uk

SPECIFICATION

MODEL		LCM-25DA					
OUTPUT	SELECTABLE CURRENT Note.3	350mA	500mA	600mA	700mA	900mA	1050mA
	DC VOLTAGE RANGE	6 ~ 54V	6 ~ 50V	6 ~ 42V	6 ~ 36V	6 ~ 28V	6 ~ 24V
	RATED POWER	18.9W	25.2W				
	RIPPLE CURRENT	±5.0%					
	RIPPLE & NOISE (max.) Note.2	400mVp-p					
	NO LOAD OUTPUT VOLTAGE (max.)	59V			41V		
	CURRENT ACCURACY	±5.0%					
	SETUP, RISE TIME Note.5	500ms, 50ms / 230VAC at full load					
	HOLD UP TIME (Typ.)	30ms / 230VAC at full load					
INPUT	VOLTAGE RANGE Note.4	180 ~ 277VAC 254 ~ 392VDC					
	FREQUENCY RANGE	47 ~ 63Hz					
	POWER FACTOR (Typ.)	PF≧0.94/230VAC, PF≧0.91/277VAC at full load (Please refer to "Power Factor Characteristic" curve)					
	TOTAL HARMONIC DISTORTION	THD<20% when output loading≧50% at 230VAC input and output loading≧75% at 277VAC input					
	EFFICIENCY (Typ.) Note.6	86%					
	AC CURRENT (Typ.)	0.17A/230VAC 0.15A/277VAC					
	INRUSH CURRENT(max.)	COLD START 20A(t_{width}=260μs measured at 50% I_{peak}) at 230VAC					
	LEAKAGE CURRENT	<0.5mA / 240VAC					
PROTECTION	SHORT CIRCUIT	Constant current limiting, recovers automatically after fault condition is removed					
	OVER TEMPERATURE	Shut down o/p voltage, recovers automatically after temperature goes down					
FUNCTION	DIMMING	Please see "Dimming Operation"					
	SYNCHRONIZATION	Please see "Synchronization Operation"					
ENVIRONMENT	WORKING TEMP.	-30 ~ +60℃ (Refer to "Derating Curve")					
	WORKING HUMIDITY	20 ~ 90% RH non-condensing					
	STORAGE TEMP., HUMIDITY	-40 ~ +80℃, 10 ~ 95% RH					
	TEMP. COEFFICIENT	±0.03%/℃ (0 ~ 50℃)					
	VIBRATION	10 ~ 500Hz, 2G 10min./1cycle, period for 60min. each along X, Y, Z axes					
SAFETY & EMC	SAFETY STANDARDS	UL8750, CSA C22.2 NO.250.0-08, ENEC EN61347-1, EN61347-2-13, EN62384 independent approved					
	WITHSTAND VOLTAGE	I/P-O/P:3.75KVAC ; I/P-DA±:1.875KVAC ; O/P-DA±:1.875KVAC					
	ISOLATION RESISTANCE	I/P-O/P:>100M Ohms / 500VDC / 25℃/ 70% RH					
	EMC EMISSION	Compliance to EN55015, EN61000-3-2 Class C(≧50% load) ; EN61000-3-3					
	EMC IMMUNITY	Compliance to EN61000-4-2,3,4,5,6,8,11, EN55024, EN61547 light industry level (surge 2KV), criteria A					
OTHERS	MTBF	213.3K hrs min. MIL-HDBK-217F (25℃)					
	DIMENSION	105*68*23mm (L*W*H)					
	PACKING	0.17Kg ; 72pcs/13.2Kg/1.04CUFT					

NOTE

1. All parameters NOT specially mentioned are measured at 230VAC input, rated load and 25℃ of ambient temperature.
2. Ripple & noise are measured at 20MHz of bandwidth by using a 12" twisted pair-wire terminated with a 0.1uf & 47uf parallel capacitor.
3. Please see "DIP switch table".
4. Derating may be needed under low input voltage. Please check the static characteristics for more details.
5. Length of set up time is measured at first cold start. Turning ON/OFF the power supply may lead to increase of the set up time.
6. Efficiency is measured at 500mA/50V output set by DIP switch.
7. No load power consumption<0.5W is measured at 230VAC, with lighting fixture connected and output current dimmed to 0%.
8. The power supply is considered as a component that will be operated in combination with final equipment. Since EMC performance will be affected by the complete installation, the final equipment manufacturers must re-qualify EMC Directive on the complete installation again.

MeanWell Direct
Tel: +44 (0)118 970 3858 E-mail: sales@meanwelldirect.co.uk

Block Diagram

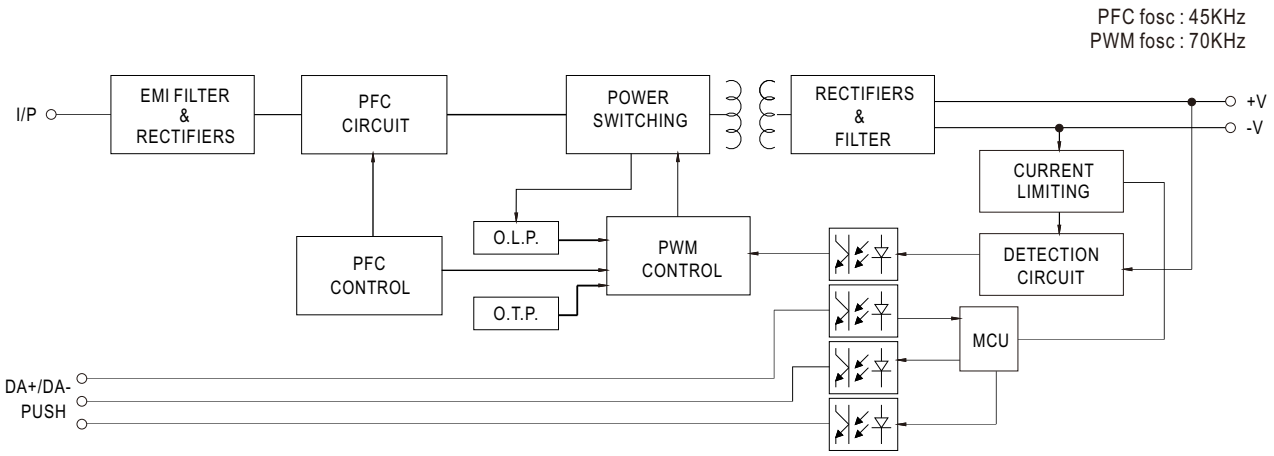

Derating Curve

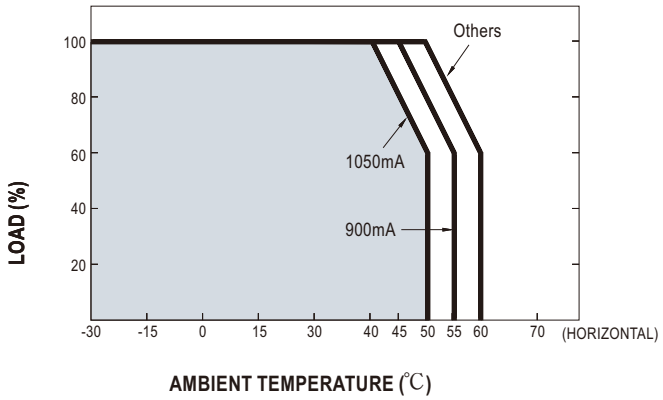

Static Characteristics

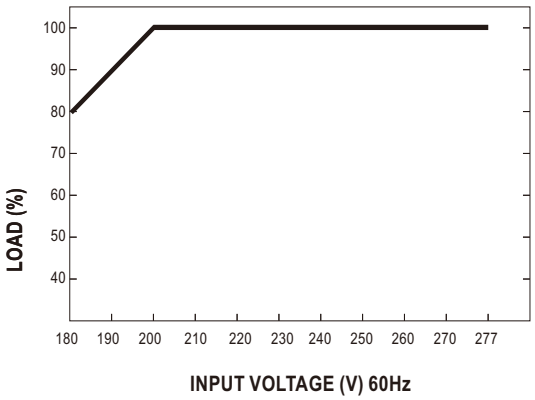

DIP Switch Table

LCM-25DA is a multiple-stage output current supply, selection of output current through DIP switch as table below.

Io \ DIP S.W.	1	2	3	4	5	6
350mA	----	----	----	----	----	----
500mA	ON	----	----	----	----	----
600mA	ON	ON	----	----	----	----
700mA(Factory Setting)	ON	ON	ON	----	----	ON
900mA	ON	ON	ON	ON	----	ON
1050mA	ON	ON	ON	ON	ON	ON

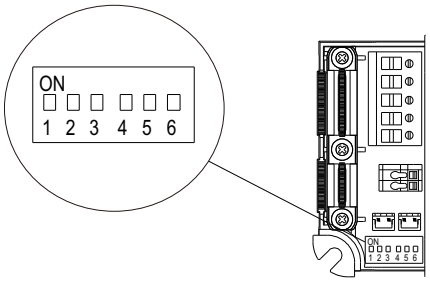

MeanWell Direct
Tel: +44 (0)118 970 3858 E-mail: sales@meanwelldirect.co.uk

■ Power Factor Characteristic

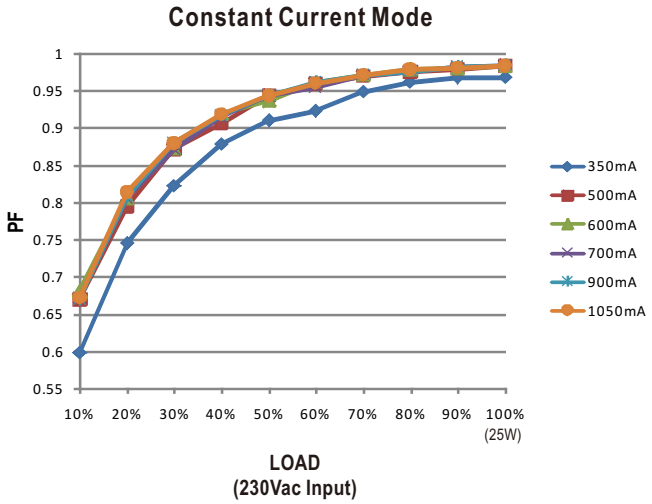

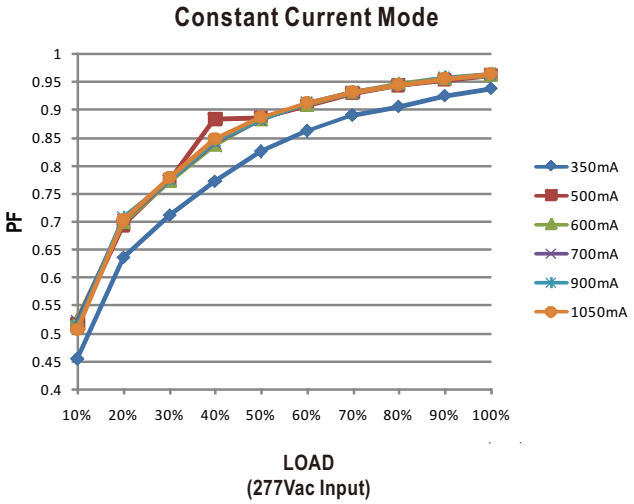

■ Total Harmonic Distortion Characteristic

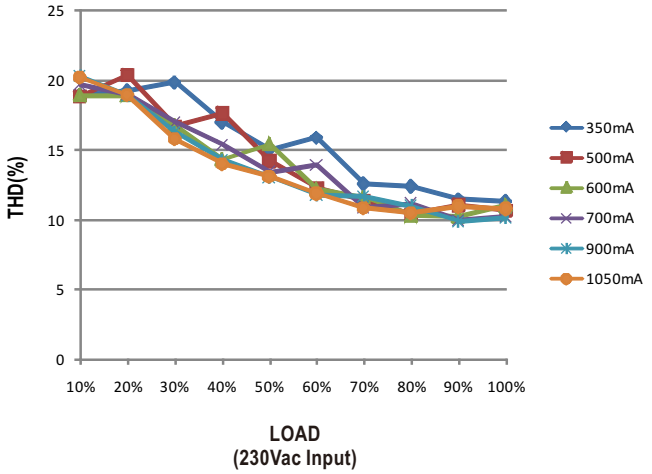

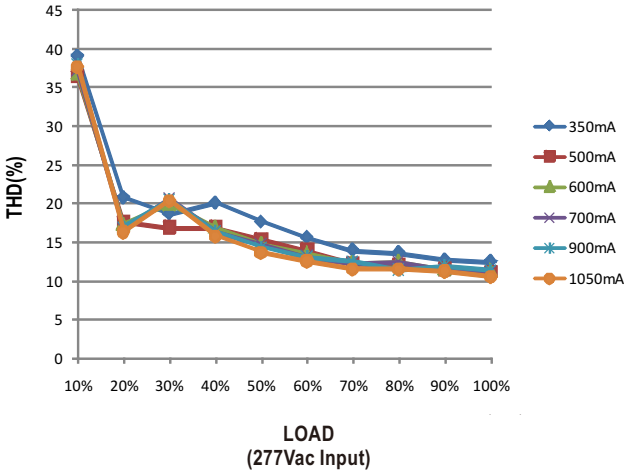

■ EFFICIENCY vs LOAD

LCM-25DA possess superior working efficiency that up to 86% can be reached in field applications.

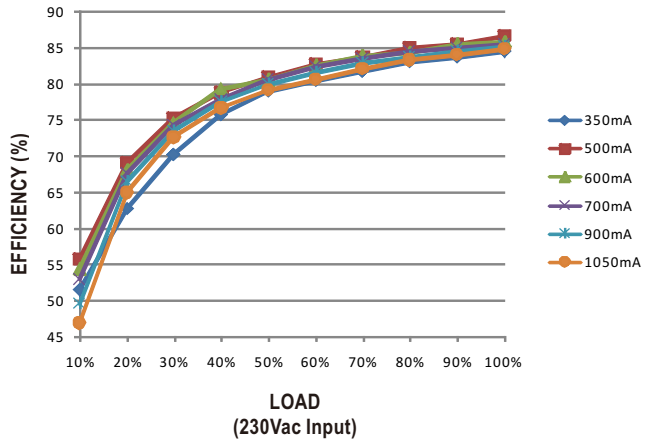

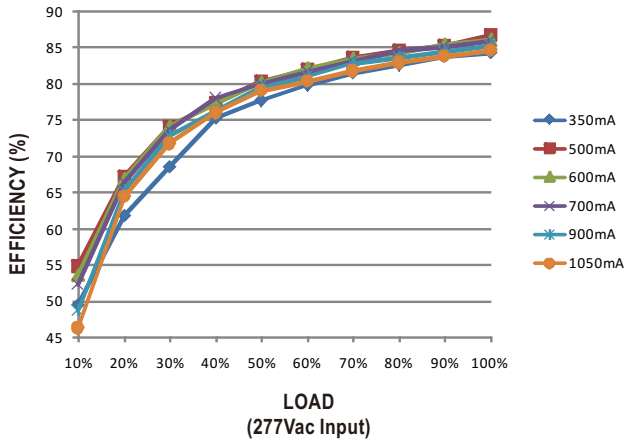

MeanWell Direct
Tel: +44 (0)118 970 3858 E-mail: sales@meanwelldirect.co.uk

■ DIMMING OPERATION

※ **PUSH dim(primary side)**

Ignore	To avoid reaction on AC spike	<0.05 sec.
Short push	Push to turn ON-OFF	0.1~1 sec.
Long push	Dimming up or down	1.5~10 sec.
Reset push	Setting light to 100%	>11 sec.

- Maximum number of drivers up to 10 pcs.
- Maximum length of the cable, from push button to the last driver is 135 meters.
- Factory setting at 100%.
- When the light is lower than 10% it will always dim up, or when the light output is higher than 90% it will always dim down.

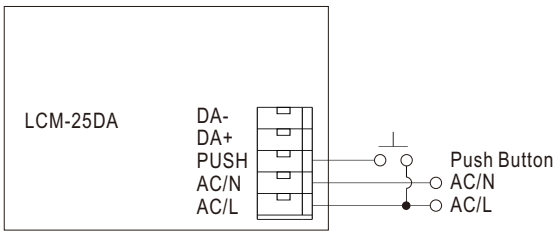

Warning: The push button can only be connected in between the PUSH terminal of LCM-25DA and AC/L (brown or black color). It would cause short circuit if it is connected to AC/N.

※ **DALI interface(primary side)**

- DALI protocol including 16 groups and 64 addresses.
- First step is fixed at 6% of output.
- Maximum DALI cable length is 300 meters.(based on a 1.5 mm^2 or 14 AWG cable)

■ SYNCHRONIZATION OPERATION

- 10 drivers(max.) synchronization (1 master + 9 slaves).
- Maximum cable length between each units : 20 meters.
- Maximum cable length from the master unit to each end of the last slave units : 120 meters.

※ Please make sure all units are set to 100% dimming setting (factory default) before synchronization.

- The lights driven by LCM units(Slaves) can be dimmed synchronously through a LCM unit(the master) directly controlled via DALI or push dim dimming function. The wiring is shown as below.

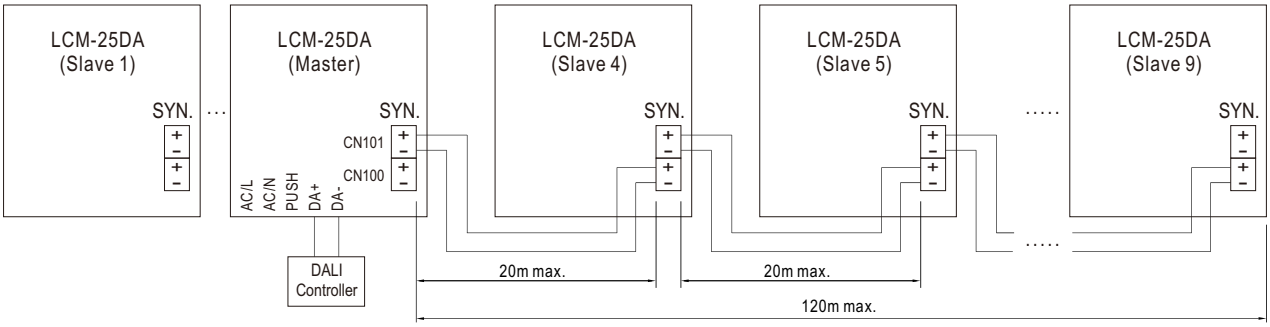

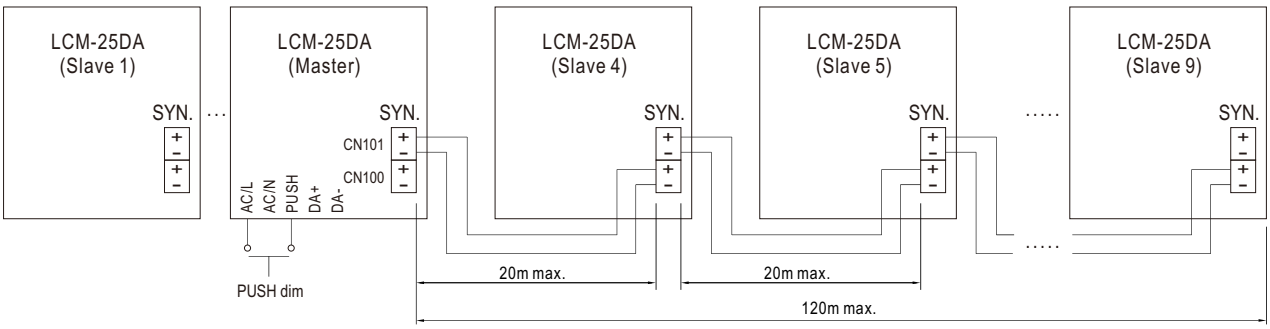

- CN100, CN101 : used to synchronously control the LCM units in parallel.

MeanWell Direct
Tel: +44 (0)118 970 3858 E-mail: sales@meanwelldirect.co.uk

■ Mechanical Specification

Case No.LCM-25 Unit:mm

※ T case: Max. Case Temperature.

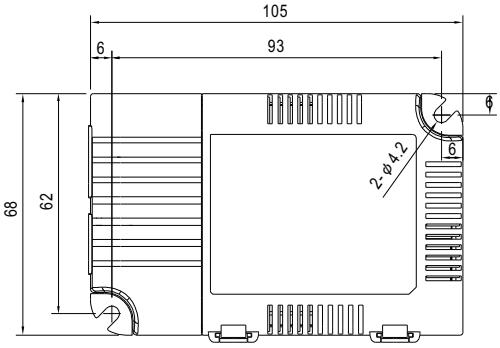

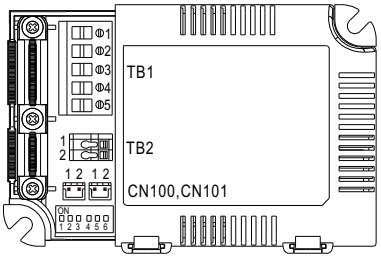

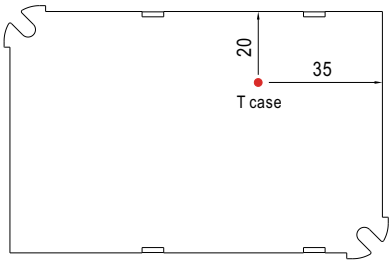

Bottom View

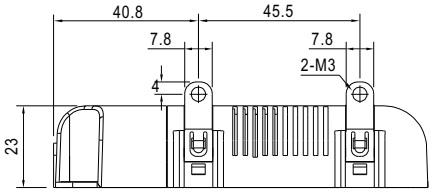

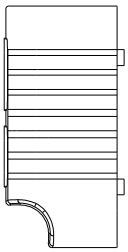

Terminal Pin No. Assignment(TB2)

Pin No.	Assignment
1	+Vo
2	-Vo

SYN. Connector(CN100/CN101):JST B2B-PH-KL or equivalent

Pin No.	Assignment	Mating Housing	Terminal
1	–	JST PHR-2 or equivalent	JST SPH-002T-P0.5S or equivalent
2	+		

Terminal Pin No. Assignment(TB1)

Pin No.	Assignment	Pin No.	Assignment
1	AC/L	4	DA+
2	AC/N	5	DA-
3	PUSH		

Note:Please use wires with 0.5~2.5mm^2(13~20AWG) of cross-section for TB1 and wires with 0.5~1.5 mm^2(16~20AWG) of cross -section for TB2.

■ Installation Manual

Please refer to : http://www.meanwell.com/webnet/search/InstallationSearch.html

MeanWell Direct
Tel: +44 (0)118 970 3858 E-mail: sales@meanwelldirect.co.uk