96W Single Output Industrial DIN Rail Power Supply MDR-100 series

■ Features :

- Universal AC input / Full range
- Protections: Short circuit / Overload / Over voltage / Over temperature
- ZCS/ZVS technology to reduce power dissipation
- Cooling by free air convection
- Can be installed on DIN rail TS-35/7.5 or 15
- DC OK relay contact
- No load power consumption<1W
- LED indicator for power on
- 100% full load burn-in test
- 3 years warranty

SPECIFICATION

MODEL		MDR-100-12	MDR-100-24	MDR-100-48
OUTPUT	DC VOLTAGE	12V	24V	48V
	RATED CURRENT	7.5A	4A	2A
	CURRENT RANGE	0 ~ 7.5A	0 ~ 4A	0 ~ 2A
	RATED POWER	90W	96W	96W
	RIPPLE & NOISE (max.) Note.2	120mVp-p	150mVp-p	200mVp-p
	VOLTAGE ADJ. RANGE	12 ~ 15V	24 ~ 30V	48 ~ 56V
	VOLTAGE TOLERANCE Note.3	±1.0%	±1.0%	±1.0%
	LINE REGULATION	±1.0%	±1.0%	±1.0%
	LOAD REGULATION	±1.0%	±1.0%	±1.0%
	SETUP, RISE TIME Note.5	3000ms, 50ms/230VAC 3000ms, 50ms/115VAC at full load		
	HOLD UP TIME (Typ.)	50ms/230VAC 20ms/115VAC at full load		
INPUT	VOLTAGE RANGE Note.6	85 ~ 264VAC 120 ~ 370VDC		
	FREQUENCY RANGE	47 ~ 63Hz		
	POWER FACTOR (Typ.)	PF≧0.95/230VAC PF≧0.98/115VAC at full load		
	EFFICIENCY (Typ.)	83%	86%	87%
	AC CURRENT (Typ.)	1.3A/115VAC 0.8A/230VAC		
	INRUSH CURRENT (Typ.)	COLD START 30A/115VAC 60A/230VAC		
	LEAKAGE CURRENT	<1mA / 240VAC		
PROTECTION	OVERLOAD	105 ~ 150% rated output power		
		Protection type : Constant current limiting, recovers automatically after fault condition is removed		
	OVER VOLTAGE	15.6 ~ 18V	31.2 ~ 36V	57.6 ~ 64.8V
		Protection type : Shut down o/p voltage, re-power on to recover		
	OVER TEMPERATURE	Shut down o/p voltage, auto-recovery or re-power on to recover		
FUNCTION	DC OK SIGNAL	Relay contact rating(max.): 30V/1A resistive		
ENVIRONMENT	WORKING TEMP.	-10 ~ +60℃ (Refer to "Derating Curve")		
	WORKING HUMIDITY	20 ~ 90% RH non-condensing		
	STORAGE TEMP., HUMIDITY	-40 ~ +85℃, 10 ~ 95% RH		
	TEMP. COEFFICIENT	±0.03%/℃ (0 ~ 50℃)		
	VIBRATION	Component : 10 ~ 500Hz, 2G 10min./1cycle, period for 60min. each along X, Y, Z axes ; Mounting : Compliance to IEC60068-2-6		
SAFETY & EMC (Note 4)	SAFETY STANDARDS	UL508, TUV EN60950-1 approved		
	WITHSTAND VOLTAGE	I/P-O/P:3KVAC I/P-FG:2KVAC O/P-FG:0.5KVAC		
	ISOLATION RESISTANCE	I/P-O/P, I/P-FG, O/P-FG:>100M Ohms / 500VDC / 25℃/ 70% RH		
	EMC EMISSION	Compliance to EN55011, EN55022 (CISPR22), EN61204-3 Class B, EN61000-3-2,-3		
	EMC IMMUNITY	Compliance to EN61000-4-2,3,4,5,6,8,11, EN55024, EN61000-6-2, EN61204-3, heavy industry level, criteria A		
OTHERS	MTBF	346K hrs min. MIL-HDBK-217F (25℃)		
	DIMENSION	55*90*100mm (W*H*D)		
	PACKING	0.42Kg; 30pcs/13.6Kg/0.82CUFT		

NOTE

1. All parameters NOT specially mentioned are measured at 230VAC input, rated load and 25℃ of ambient temperature.
2. Ripple & noise are measured at 20MHz of bandwidth by using a 12" twisted pair-wire terminated with a 0.1uf & 47uf parallel capacitor.
3. Tolerance : includes set up tolerance, line regulation and load regulation.
4. The power supply is considered a component which will be installed into a final equipment. The final equipment must be re-confirmed that it still meets EMC directives. For guidance on how to perform these EMC tests, please refer to “EMI testing of component power supplies.” (as available on http://www.meanwell.com)
5. Length of set up time is measured at first cold start. Turning ON/OFF the power supply may lead to increase of the set up time.
6. Deating maybe needed under low input voltages, please check the derating curve for more detail.

MeanWell Direct, Orion House, Calleva Park, Aldermaston, Berkshire, RG7 8SN
Tel: +44 (0)118 9703858 Email: sales@meanwelldirect.co.uk

■ Mechanical Specification

Case No.973A Unit:mm

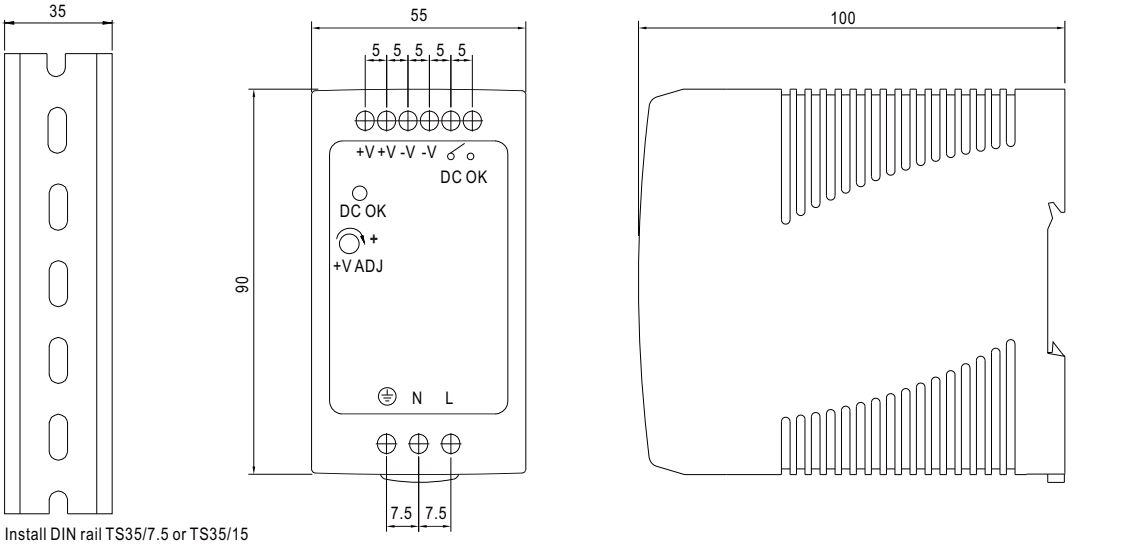

Install DIN rail TS35/7.5 or TS35/15

■ Block Diagram

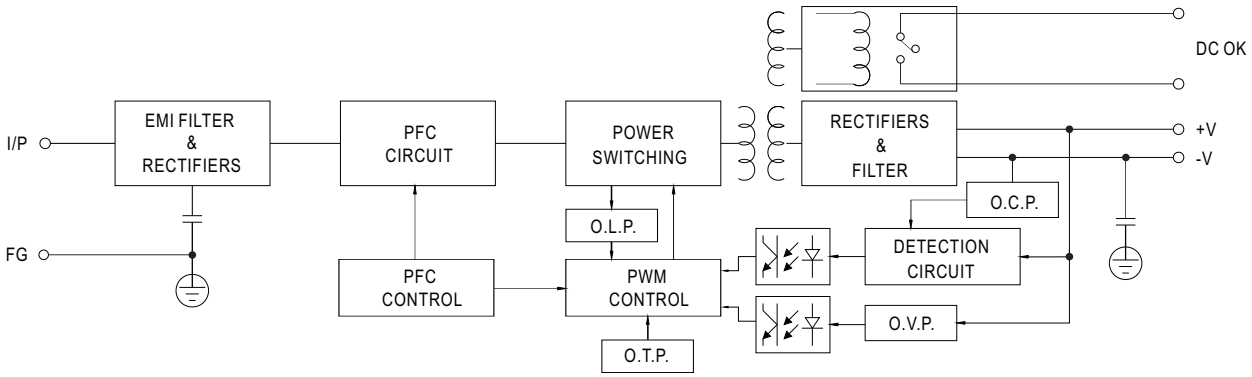

■ DC OK Relay Contact

Contact Close	PSU turns on / DC OK.
Contact Open	PSU turns off / DC Fail.
Contact Ratings (max.)	30V/1A resistive load.

■ Derating Curve

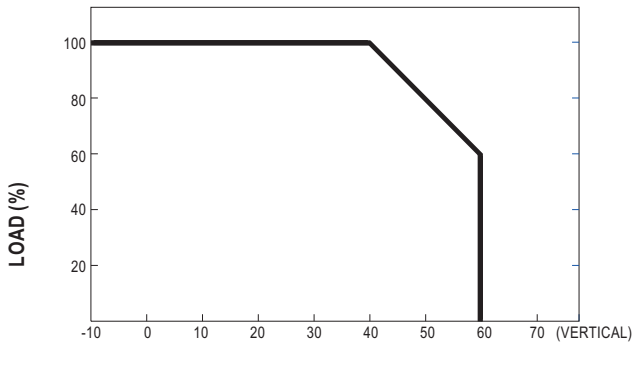

AMBIENT TEMPERATURE (℃)

■ Output Derating VS Input Voltage

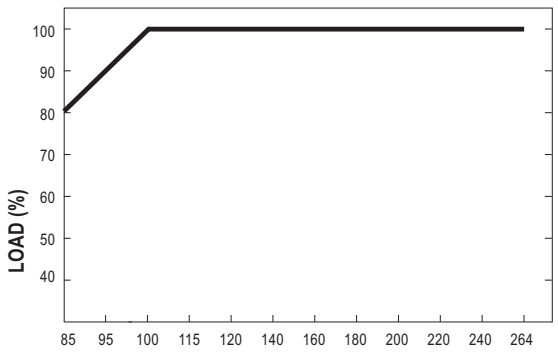

INPUT VOLTAGE (VAC) 60Hz

MeanWell Direct, Orion House, Calleva Park, Aldermaston, Berkshire, RG7 8SN
Tel: +44 (0)118 9703858 Email: sales@meanwelldirect.co.uk