# 60W Single Output Industrial DIN Rail Power Supply

# MDR-60 series

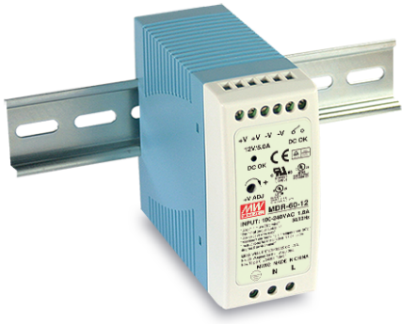

■ Features :

- Universal AC input/Full range
- Protections: Short circuit / Overload / Over voltage
- Cooling by free air convection
- Can be installed on DIN rail TS-35/7.5 or 15
- LED indicator for power on
- DC OK relay contact
- No load power consumption<0.75W
- 100% full load burn-in test
- 3 years warranty

## SPECIFICATION

| MODEL | | MDR-60-5 | MDR-60-12 | MDR-60-24 | MDR-60-48 |
|---|---|---|---|---|---|
| OUTPUT | DC VOLTAGE | 5V | 12V | 24V | 48V |
| | RATED CURRENT | 10A | 5A | 2.5A | 1.25A |
| | CURRENT RANGE | 0 ~ 10A | 0 ~ 5A | 0 ~ 2.5A | 0 ~ 1.25A |
| | RATED POWER | 50W | 60W | 60W | 60W |
| | RIPPLE & NOISE (max.) Note.2 | 80mVp-p | 120mVp-p | 150mVp-p | 200mVp-p |
| | VOLTAGE ADJ. RANGE | 5 ~ 6V | 12 ~ 15V | 24 ~ 30V | 48 ~ 56V |
| | VOLTAGE TOLERANCE Note.3 | ±2.0% | ±1.0% | ±1.0% | ±1.0% |
| | LINE REGULATION | ±1.0% | ±1.0% | ±1.0% | ±1.0% |
| | LOAD REGULATION | ±1.5% | ±1.0% | ±1.0% | ±1.0% |
| | SETUP, RISE TIME Note.5 | 500ms, 30ms/230VAC 500ms, 30ms/115VAC at full load | | | |
| | HOLD UP TIME (Typ.) | 50ms/230VAC 20ms/115VAC at full load | | | |
| INPUT | VOLTAGE RANGE | 85 ~ 264VAC 120 ~ 370VDC | | | |
| | FREQUENCY RANGE | 47 ~ 63Hz | | | |
| | EFFICIENCY (Typ.) | 78% | 86% | 88% | 87% |
| | AC CURRENT (Typ.) | 1.8A/115VAC 1A/230VAC | | | |
| | INRUSH CURRENT (Typ.) | COLD START 30A/115VAC 60A/230VAC | | | |
| | LEAKAGE CURRENT | <1mA / 240VAC | | | |
| PROTECTION | OVERLOAD | 105 ~ 150% rated output power | | | |
| | | Protection type : Constant current limiting, recovers automatically after fault condition is removed | | | |
| | OVER VOLTAGE | 6.25 ~ 7.25V | 15.6 ~ 18V | 31.2 ~ 36V | 57.6 ~ 64.8V |
| | | Protection type : Shut down o/p voltage, re-power on to recover | | | |
| FUNCTION | DC OK SIGNAL | Relay contact rating(max.): 30V/1A resistive | | | |
| ENVIRONMENT | WORKING TEMP. | -20 ~ +70℃ (Refer to "Derating Curve") | | | |
| | WORKING HUMIDITY | 20 ~ 90% RH non-condensing | | | |
| | STORAGE TEMP., HUMIDITY | -40 ~ +85℃, 10 ~ 95% RH | | | |
| | TEMP. COEFFICIENT | ±0.03%/℃ (0 ~ 50℃) | | | |
| | VIBRATION | Component : 10 ~ 500Hz, 2G 10min./1cycle, period for 60min. each along X, Y, Z axes ; Mounting : Compliance to IEC60068-2-6 | | | |
| SAFETY & EMC (Note 4) | SAFETY STANDARDS | UL508, UL60950-1, TUV EN60950-1 approved | | | |
| | WITHSTAND VOLTAGE | I/P-O/P:3KVAC I/P-FG:2KVAC O/P-FG:0.5KVAC | | | |
| | ISOLATION RESISTANCE | I/P-O/P, I/P-FG, O/P-FG:>100M Ohms / 500VDC / 25℃/ 70% RH | | | |
| | EMC EMISSION | Compliance to EN55011, EN55022 (CISPR22), EN61204-3 Class B, EN61000-3-2,-3 | | | |
| | EMC IMMUNITY | Compliance to EN61000-4-2, 3, 4, 5, 6, 8, 11, EN55024, EN61000-6-2, EN61204-3, heavy industry level, criteria A | | | |
| OTHERS | MTBF | 299.2K hrs min. MIL-HDBK-217F (25℃) | | | |
| | DIMENSION | 40*90*100mm (W*H*D) | | | |
| | PACKING | 0.33Kg; 42pcs/14.8Kg/0.82CUFT | | | |

**NOTE**

1. All parameters NOT specially mentioned are measured at 230VAC input, rated load and 25℃ of ambient temperature.
2. Ripple & noise are measured at 20MHz of bandwidth by using a 12" twisted pair-wire terminated with a 0.1uf & 47uf parallel capacitor.
3. Tolerance : includes set up tolerance, line regulation and load regulation.
4. The power supply is considered a component which will be installed into a final equipment. The final equipment must be re-confirmed that it still meets EMC directives. For guidance on how to perform these EMC tests, please refer to "EMI testing of component power supplies." (as available on http://www.meanwell.com)
5. Length of set up time is measured at first cold start. Turning ON/OFF the power supply may lead to increase of the set up time.

## Mechanical Specification

Case No.962A Unit:mm

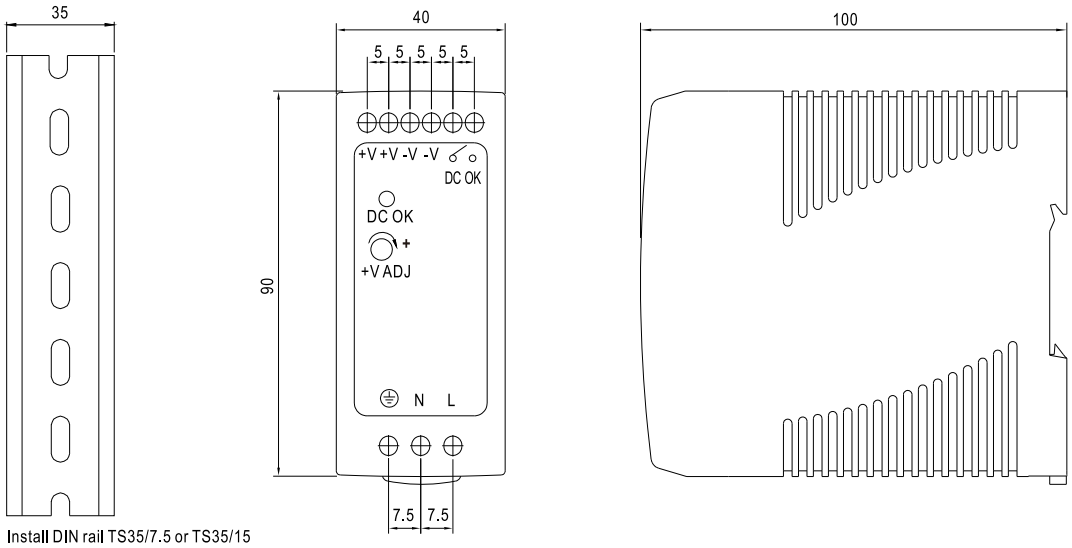


## Block Diagram

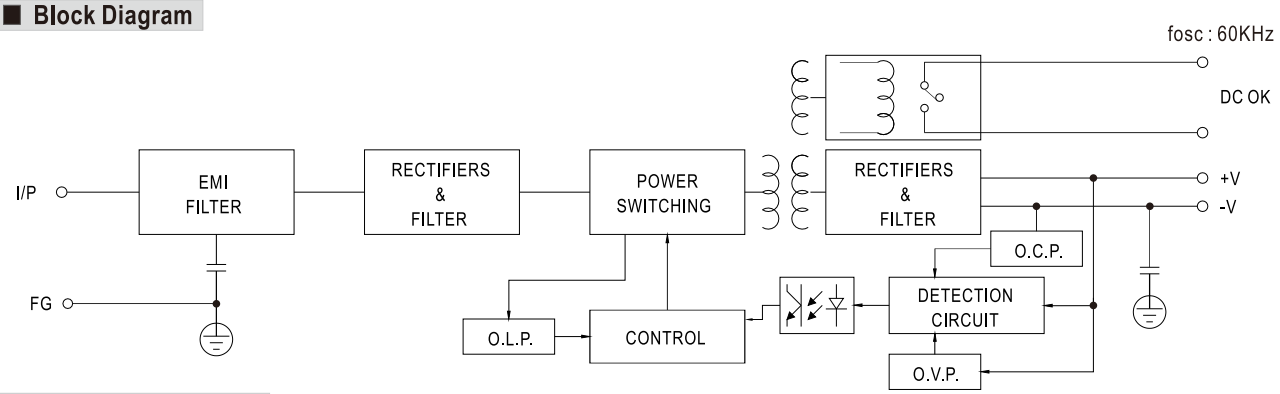


## DC OK Relay Contact

| | |
|---|---|
| Contact Close | PSU turns on / DC OK. |
| Contact Open | PSU turns off / DC Fail. |
| Contact Ratings (max.) | 30V/1A resistive load. |

## Derating Curve

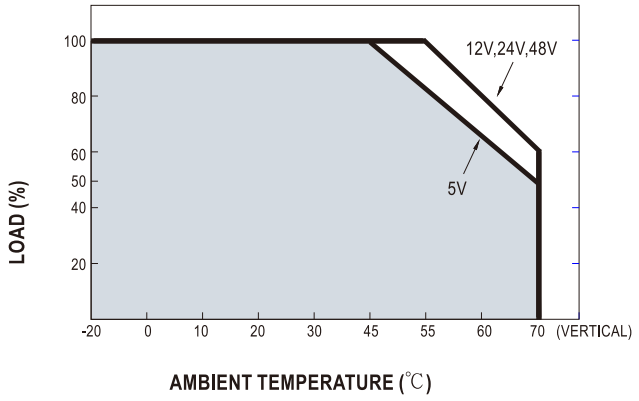

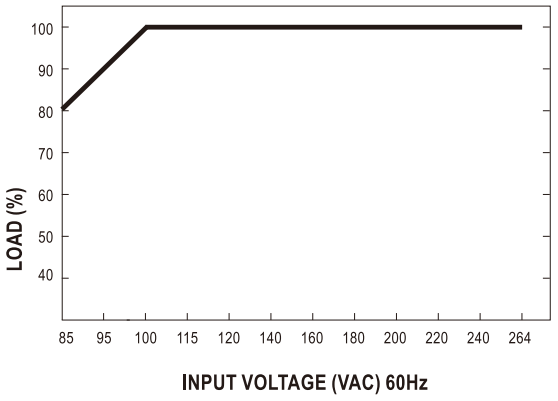
## Output Derating VS Input Voltage