3000W Power Supply with Single Output

RSP-3000 series

Dimension					
L	*	W	*	H	
278	*	177.8	*	63.5(2U)	mm
10.9	*	7	*	2.5 (2U)	inch

Parallel

Features

- AC input 180~264VAC
- Built-in active PFC function
- High efficiency up to 91.5%
- Forced air cooling by built-in DC fan
- Output voltage programmable
- Active current sharing up to 9000W (2+1)
- Built-in remote ON-OFF control / remote sense / auxiliary power / power OK signal
- Protections: Short circuit / Overload / Over voltage / Over temperature
- Optional conformal coating
- 5 years warranty

Certificates

- Safety: UL/EN/IEC 60950-1
- EMC: EN 55022 / 55024

Applications

- Factory control or automation apparatus
- Test and measurement instrument
- Laser related machine
- Burn-in facility
- Digital broadcasting
- RF application

Description

RSP-3000 is a 3KW single output enclosed type AC/DC power supply. This series operates for 180~264VAC input voltage and offers the models with the DC output mostly demanded from the industry. Each model is cooled by the built-in fan with fan speed control, working for the temperature up to 70℃. Moreover, RSP-3000 provides vast design flexibility by equipping various built-in functions such as the output programming, active current sharing, remote ON-OFF control, auxiliary power, etc.

Model Encoding / Order Information

RSP - 3000 - 24

- 24 — Output voltage (12V/24V/48V)
- 3000 — Output wattage
- RSP — Series name

File Name:RSP-3000-SPEC 2016-02-24

MeanWell Direct, Orion House, Calleva Park, Aldermaston, Berkshire, RG7 8SN
Tel: +44 (0)118 9703858 Email: sales@meanwelldirect.co.uk

SPECIFICATION

MODEL		RSP-3000-12	RSP-3000-24	RSP-3000-48
OUTPUT	DC VOLTAGE	12V	24V	48V
	RATED CURRENT	200A	125A	62.5A
	CURRENT RANGE	0 ~ 200A	0 ~ 125A	0 ~ 62.5A
	RATED POWER	2400W	3000W	3000W
	RIPPLE & NOISE (max.) Note.2	150mVp-p	150mVp-p	200mVp-p
	VOLTAGE ADJ. RANGE	10.8 ~ 13.2V	22 ~ 28V	43 ~ 56V
	VOLTAGE TOLERANCE Note.3	±1.0%	±1.0%	±1.0%
	LINE REGULATION	±0.5%	±0.5%	±0.5%
	LOAD REGULATION	±0.5%	±0.5%	±0.5%
	SETUP, RISE TIME	1000ms, 80ms at full load		
	HOLD UP TIME (Typ.)	10ms at full load		
INPUT	VOLTAGE RANGE	180 ~ 264VAC 254 ~ 370VDC		
	FREQUENCY RANGE	47 ~ 63Hz		
	POWER FACTOR (Typ.)	0.95/230VAC at full load		
	EFFICIENCY (Typ.)	87.5%	90%	91.5%
	AC CURRENT (Typ.)	20A/180VAC 16A/230VAC		
	INRUSH CURRENT (Typ.)	60A/230VAC		
	LEAKAGE CURRENT	<2.0mA / 240VAC		
PROTECTION	OVERLOAD	100 ~ 112% rated output power		
		User adjustable continuous constant current limiting or constant current limiting with delay shutdown after 5 seconds, re-power on to recover		
	OVER VOLTAGE	13.8 ~ 16.8V	28.8 ~ 33.6V	57.6 ~ 67.2V
		Protection type : Shut down o/p voltage, re-power on to recover		
	OVER TEMPERATURE	Shut down o/p voltage, recovers automatically after temperature goes down		
FUNCTION	OUTPUT VOLTAGE PROGRAMMABLE(PV)	2.4 ~ 13.2V	4.8 ~ 28V	9.6 ~ 56V
		Please refer to the Function Manual.		
	CURRENT SHARING	Up to 9000W or (2+1) units. Please refer to the Function Manual.		
	AUXILIARY POWER(AUX)	12V@0.1A(Only for Remote ON/OFF control)		
	REMOTE ON-OFF CONTROL	Please refer to the Function Manual		
	REMOTE SENSE	Compensate voltage drop on the load wiring up to 0.25V. Please refer to the Function Manual.		
	ALARM SIGNAL OUTPUT	Power OK signal. Please refer to the Function Manual		
ENVIRONMENT	WORKING TEMP.	-20 ~ +70℃ (Refer to "Derating Curve")		
	WORKING HUMIDITY	20 ~ 90% RH non-condensing		
	STORAGE TEMP., HUMIDITY	-40 ~ +85℃, 10 ~ 95% RH		
	TEMP. COEFFICIENT	±0.05%/℃ (0 ~ 50℃)		
	VIBRATION	10 ~ 500Hz, 2G 10min./1cycle, 60min. each along X, Y, Z axes		
SAFETY & EMC (Note 4)	SAFETY STANDARDS	UL60950-1, TUV EN60950-1 approved		
	WITHSTAND VOLTAGE	I/P-O/P:3KVAC I/P-FG:2KVAC O/P-FG:0.5KVAC		
	ISOLATION RESISTANCE	I/P-O/P, I/P-FG, O/P-FG:100M Ohms / 500VDC / 25℃/ 70% RH		
	EMC EMISSION	**Parameter**	**Standard**	**Test Level / Note**
		Conducted	EN55022 (CISPR22) / EN55011 (CISPR11)	Class A
		Radiated	EN55022 (CISPR22) / EN55011 (CISPR11)	Class A
		Harmonic Current	EN61000-3-2	-----
		Voltage Flicker	EN61000-3-3	-----
	EMC IMMUNITY	EN55024 , EN61204-3, EN61000-6-2		
		Parameter	**Standard**	**Test Level / Note**
		ESD	EN61000-4-2	Level 3, 8KV air ; Level 2, 4KV contact
		Radiated	EN61000-4-3	Level 3
		EFT / Burst	EN61000-4-4	Level 3
		Surge	EN61000-4-5	Level 4, 2KV/Line-Line 4KV/Line-Earth
		Conducted	EN61000-4-6	Level 3
		Magnetic Field	EN61000-4-8	Level 4
		Voltage Dips and Interruptions	EN61000-4-11	>95% dip 0.5 periods, 30% dip 25 periods, >95% interruptions 250 periods
OTHERS	MTBF	223.8K hrs min. Telcordia SR-332 (Bellcore) ; 75.1K hrs min. MIL-HDBK-217F (25℃)7F (25℃)		
	DIMENSION	278*177.8*63.5mm (L*W*H)		
	PACKING	4Kg; 4pcs/16Kg/1.81CUFT		
NOTE	1. All parameters NOT specially mentioned are measured at 230VAC input, rated load and 25℃ of ambient temperature. 2. Ripple & noise are measured at 20MHz of bandwidth by using a 12" twisted pair-wire terminated with a 0.1uf & 47uf parallel capacitor. 3. Tolerance : includes set up tolerance, line regulation and load regulation. 4. The power supply is considered a component which will be installed into a final equipment. All the EMC tests are been executed by mounting the unit on a 720mm*360mm metal plate with 1mm of thickness. The final equipment must be re-confirmed that it still meets EMC directives. For guidance on how to perform these EMC tests, please refer to "EMI testing of component power supplies." (as available on http://www.meanwell.com)			

MeanWell Direct, Orion House, Calleva Park, Aldermaston, Berkshire, RG7 8SN
Tel: +44 (0)118 9703858 Email: sales@meanwelldirect.co.uk

Block Diagram

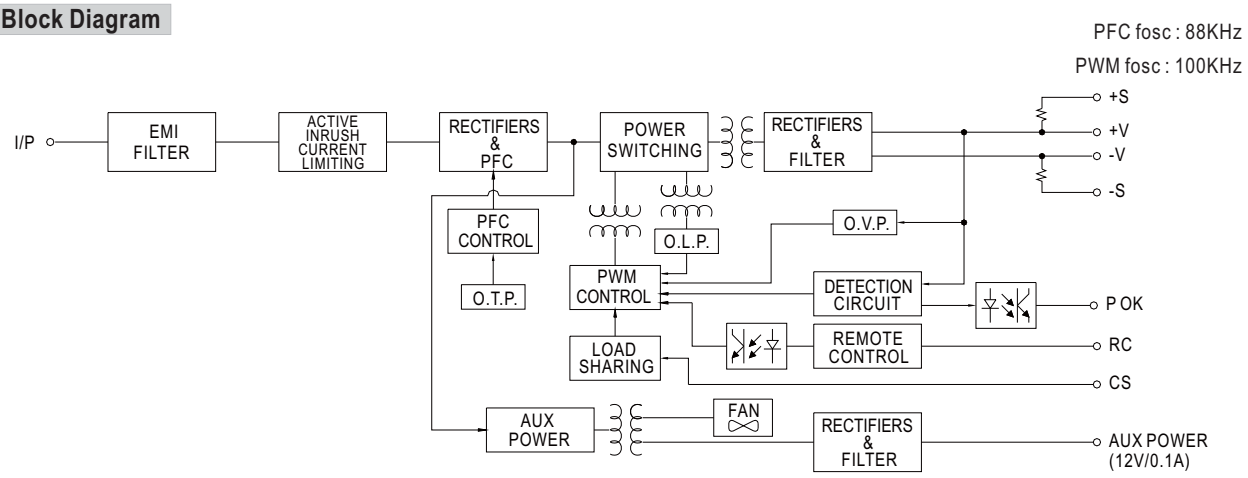

Static Characteristics

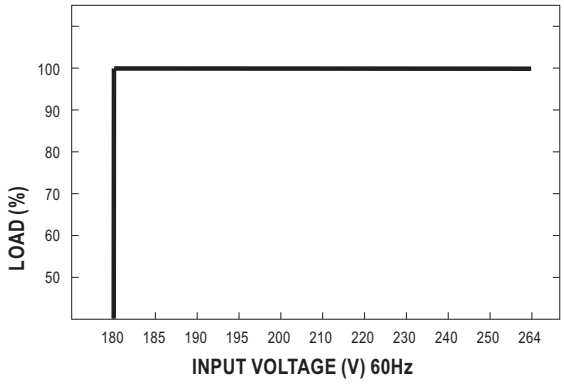

INPUT \ MODEL	12V	24V	48V
180~264VAC	2400W 200A	3000W 125A	3000W 62.5A

Derating Curve

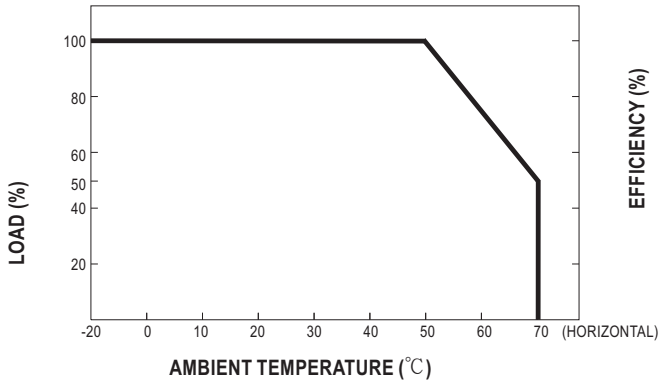

Efficiency vs Load (48V Model)

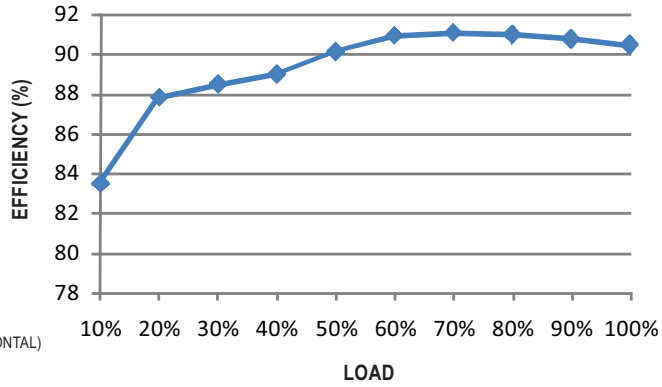

※ The curve above is measured at 230VAC.

MeanWell Direct, Orion House, Calleva Park, Aldermaston, Berkshire, RG7 8SN
Tel: +44 (0)118 9703858 Email: sales@meanwelldirect.co.uk

■ Function Manual

1. Remote Sense

※ The Remote Sense compensates voltage drop on the load wiring up to 0.25V

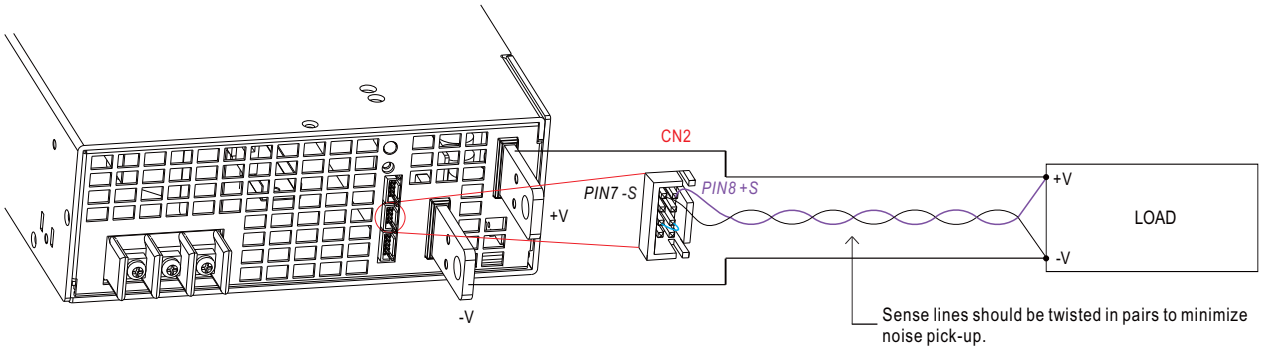

※ Caution: The power supply, by factory default(also the assumption for other sections), is shipped with, -S & -V on CN2, as well as +S & +V, shorted by connector. When activating the Remote Sense, the +S signal should be connected to the positive terminal of the load whereas -S signal to

2. Output Voltage Programming (or, PV / remote voltage programming / remote adjust / margin programming / dynamic voltage trim)

※ In addition to the adjustment via the built-in potentiometer, the output voltage can be trimmed to 20~110%(Typ.) of the nominal voltage by applying EXTERNAL VOLTAGE.

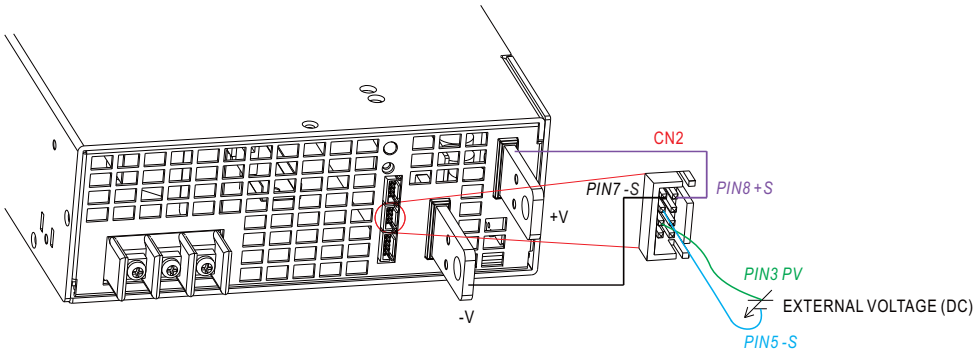

◎ Connecting an external DC source between *PV* & *-S* on CN2, and *+S* & *+V*, *-S* & *-V* also need to be connected.

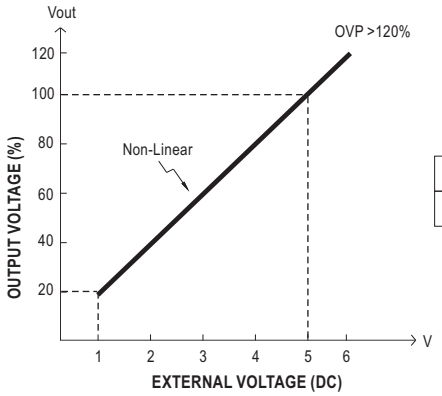

MODEL	12V	24V	48V
PV Range	2.4 ~ 13.2V	4.8 ~ 28V	9.6 ~ 56V

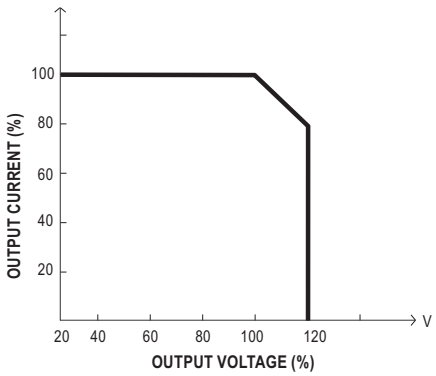

◎ Please do not adopt PWM signal as the EXTERNAL VOLTAGE.

◎ The rated current should change with the Output Voltage Programming accordingly.

※ Caution: (1)By factory default, the Output Voltage Programming is not activated, and *PV(PIN3)* and *PS(PIN4)* of CN2 are shorted by connector. Whenever this function is not needed to activate, as assumed in other sections' diagrams, please keep *PV(PIN3)* and *PS(PIN4)* of CN2 shorted ; otherwise, the power supply will have no output.

(2)*PV(PIN3)* and *PS(PIN4)* of CN1 or CN2 must be disconnected if "Output Voltage Programming" function is used; otherwise, the internal electrical components may be damaged, and the power supply unit may thus be out of order.

MeanWell Direct, Orion House, Calleva Park, Aldermaston, Berkshire, RG7 8SN
Tel: +44 (0)118 9703858 Email: sales@meanwelldirect.co.uk

3.Remote ON-OFF

※ Remote ON-OFF is activated by the configuration with respect to CN1,CN2 and CN3 as shown in the following diagram.

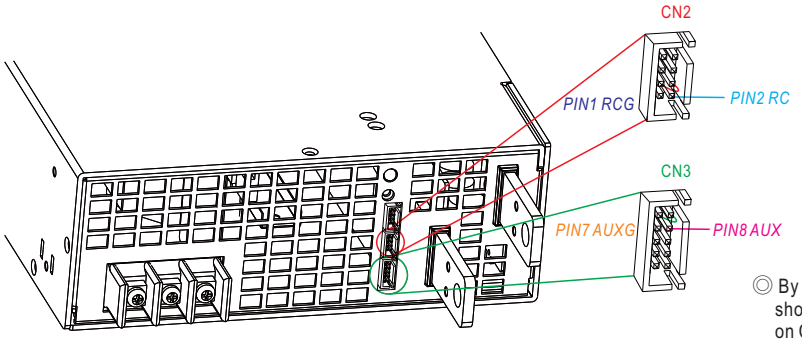

◎ By factory default, *PV(PIN3)* and *PS(PIN4)* on CN2 are shorted by connector; likewise, *OLP(PIN9)* and *OL-SD(PIN10)* on CN3 are shorted when shipped.

Example 3.2(A): Using external voltage source

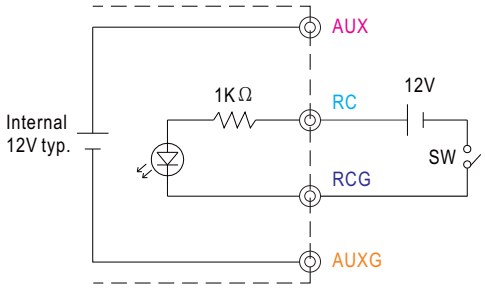

Example 3.2(B): Using internal 12V auxiliary output

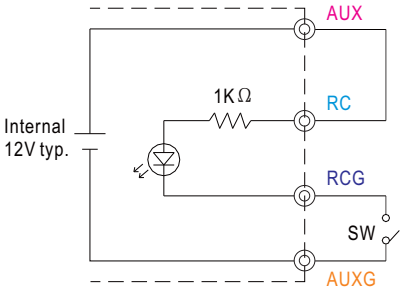

Example 3.2(C): Using internal 12V auxiliary output

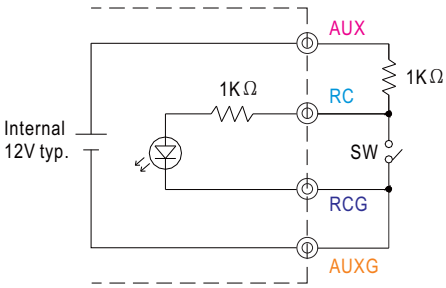

◎ Connection Method

		Example 3.2(A)	Example 3.2(B)	Example 3.2(C)
SW Logic	Power supply output ON	SW Open	SW Open	SW Close
	Power supply output OFF	SW Close	SW Close	SW Open

MeanWell Direct, Orion House, Calleva Park, Aldermaston, Berkshire, RG7 8SN
Tel: +44 (0)118 9703858 Email: sales@meanwelldirect.co.uk

4.Alarm Signal Output

※ Alarm signal is sent out through "*P OK*" & "*P OK GND*" and *P OK2 & P OK GND2* pins on CN3. Please acknowledge an external voltage source is required for this function.

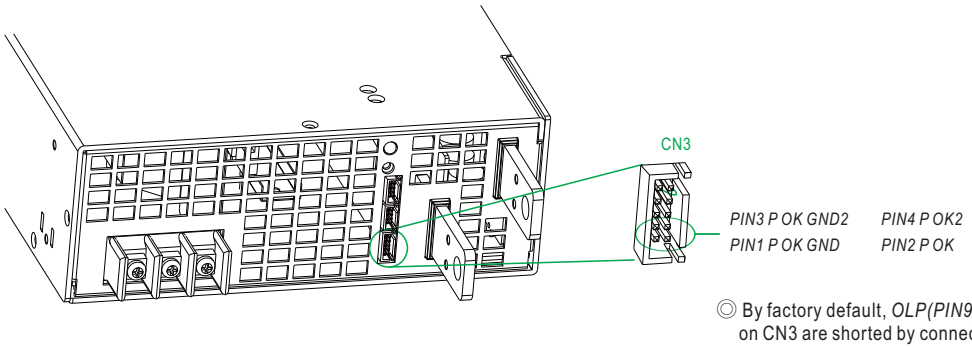

◎ By factory default, *OLP(PIN9)* and *OL-SD(PIN10)* on CN3 are shorted by connector when shipped.

Function	Description	Output of alarm(P OK, Relay Contact)	Output of alarm(P OK2, TTL Signal)
P OK	The signal is "Low" when the power supply is above 80% of the rated output voltage, or, say, Power OK	Low (0.5V max at 500mA)	Low (0.5V max at 10mA)
	The signal turns to be "High" when the power supply is under 80% of the rated output voltage, or, say, Power Fail	High or open (External applied voltage, 500mA max.)	High or open (External applied voltage, 10mA max.)

Table 3.1 Explanation of alarm

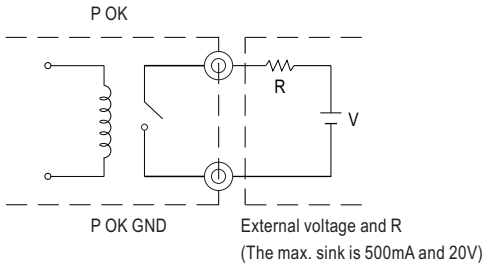

Fig. 4.2 Internal circuit of P OK (Relay, total is 10W)

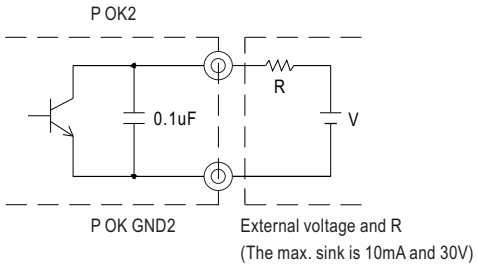

Fig. 4.3 Internal circuit of P OK2 (Open collector method)

MeanWell Direct, Orion House, Calleva Park, Aldermaston, Berkshire, RG7 8SN
Tel: +44 (0)118 9703858 Email: sales@meanwelldirect.co.uk

5.Select Overload Protection Type

(1)Insert the shorting connector on CN3 that is shown in Fig 5.2, the Overload Protection Type will be "constant current limiting with delay shutdown after 5 seconds, re-power on to recover". This is the factory default.

(2)Remove the shorting connector on CN3 that is shown in Fig 5.1, the Overload Protection Type will be "continuous constant current limiting".

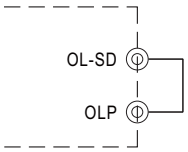

Fig. 5.1 Insert the CN3
Overload Protection Type : constant current limiting with delay shutdown after 5 seconds

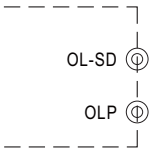

Fig. 5.2 Remove the CN3
Overload Protection Type : constant current limiting

6.Current Sharing with Remote Sense

RSP-3000 has the built-in active current sharing function and can be connected in parallel, up to 3 units, to provide higher output power as exhibited below :

※ The power supplies should be paralleled using short and large diameter wiring and then connected to the load.

※ Difference of output voltages among parallel units should be less than 0.2V.

※ The total output current must not exceed the value determined by the following equation:
Maximum output current at parallel operation=(Rated current per unit)×(Number of unit)×0.9

※ When the total output current is less than 3% of the total rated current, or say (3% of Rated current per unit)×(Number of unit) the current shared among units may not be fully balanced.

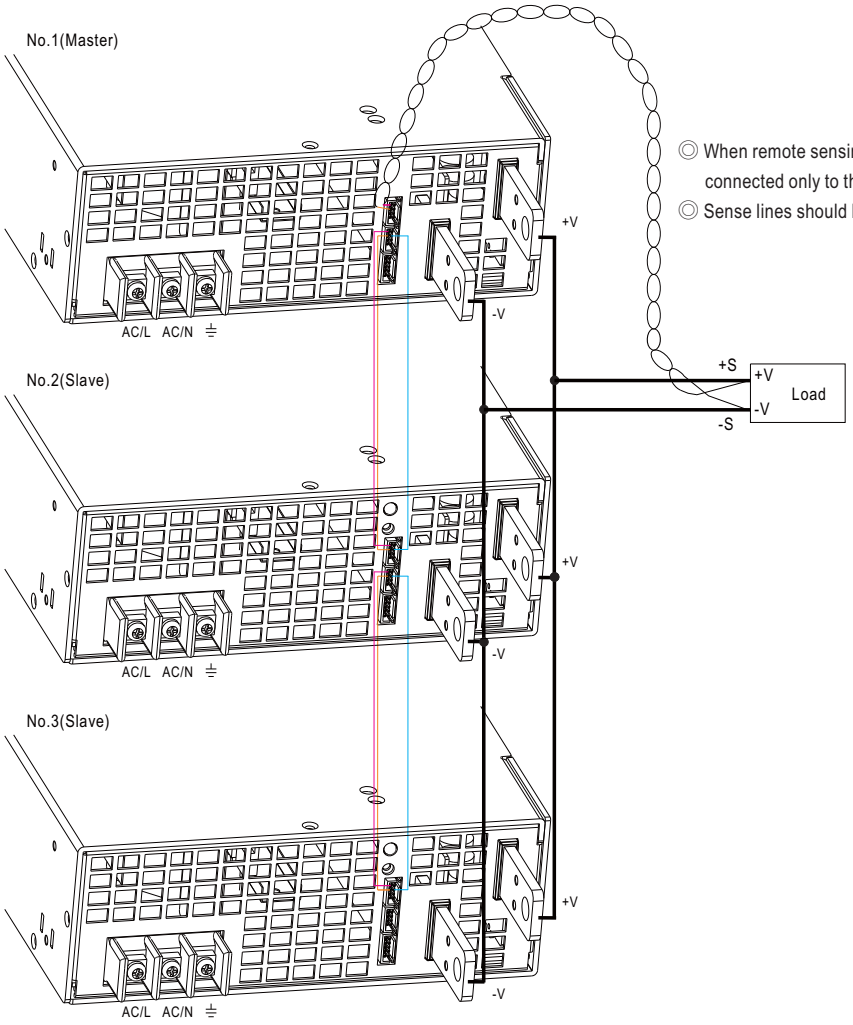

◎ When remote sensing is used in parallel operation, the sensing wire must be connected only to the master unit

◎ Sense lines should be twisted in pairs to minimize noise pick-up.

◎ *+S*,*-S* and *CS* on CN1 or CN2are connected mutually in parallel.

◎ Under parallel operation, the "output voltage programming" function is not available.

MeanWell Direct, Orion House, Calleva Park, Aldermaston, Berkshire, RG7 8SN
Tel: +44 (0)118 9703858 Email: sales@meanwelldirect.co.uk

6.Three Phase Connect

Users can exploit three units of RSP-3000(unit 1 ,unit 2,unit 3) to work with 3 ψ power system. Please refer to following diagrams for configuration.

■ FIG. A: 3 ψ 3W 220VAC SYSTEM

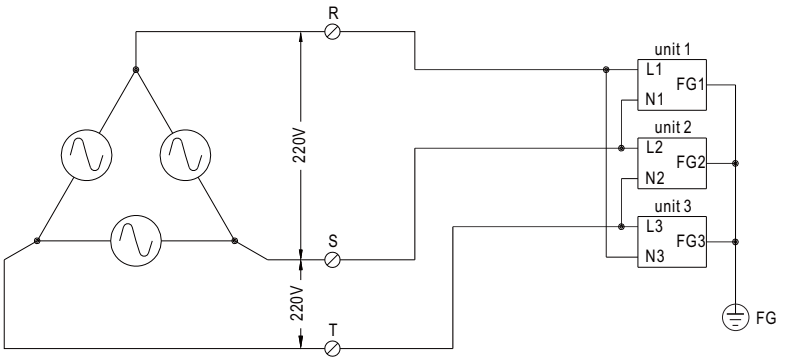

■ FIG. B: 3 ψ 4W 220/380VAC SYSTEM

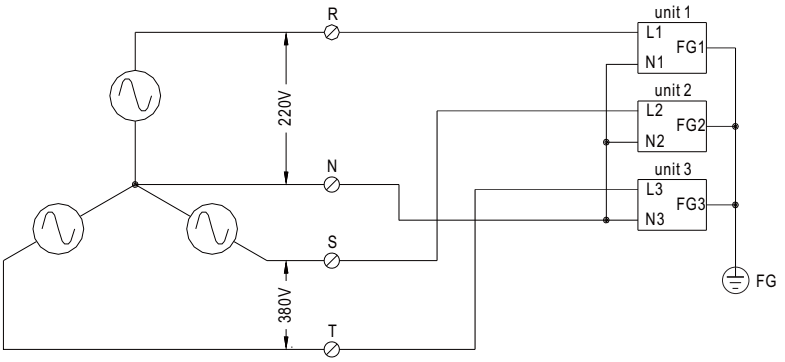

■ FIG. C: 3 ψ 4W 190/110VAC SYSTEM

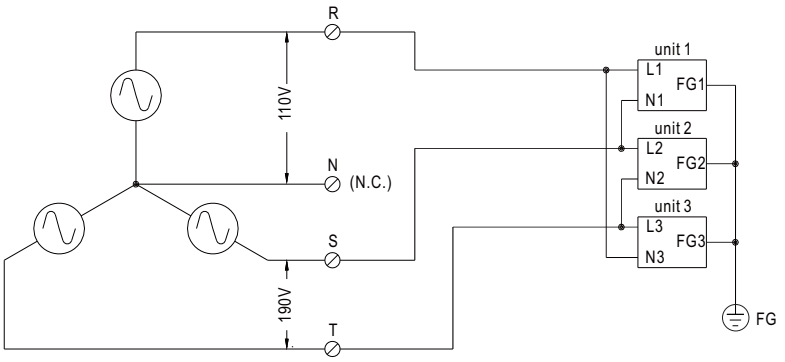

MeanWell Direct, Orion House, Calleva Park, Aldermaston, Berkshire, RG7 8SN
Tel: +44 (0)118 9703858 Email: sales@meanwelldirect.co.uk

■ Mechanical Specification

Case No.982B Unit:mm

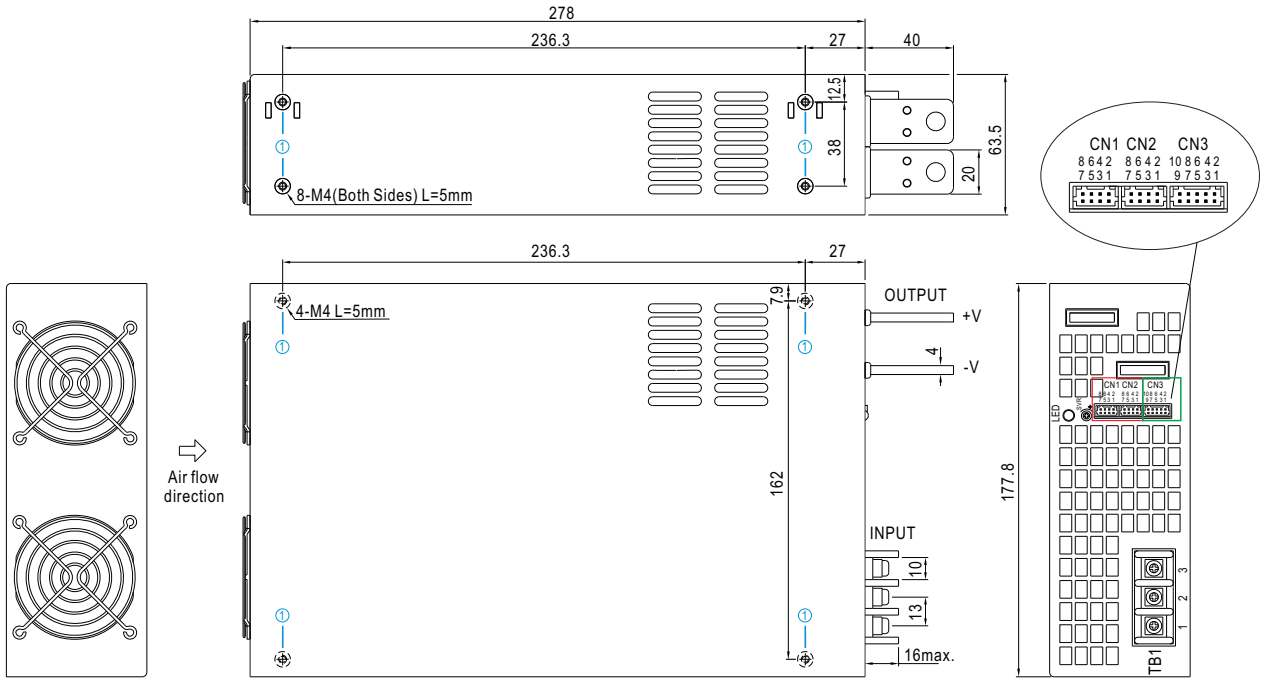

※ Mounting Instruction

Hole No.	Recommended Screw Size	MAX. Penetration Depth L	Recommended mounting torque
①	M4	5mm	7~10Kgf-cm

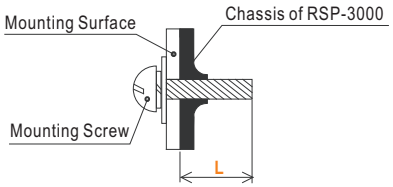

※ Control Pin No. Assignment (CN1,CN2) : HRS DF11-8DP-2DS or equivalent

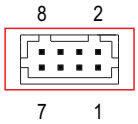

Mating Housing	HRS DF11-8DS or equivalent
Terminal	HRS DF11-**SC or equivalent

◎ CN1 and CN2 are connected internally.

Pin No.	Function	Description
1	RCG	Remote ON-OFF Ground
2	RC	Remote ON-OFF
3	PV	Connection for output voltage programming
4	PS	Reference Voltage Terminal
5,7	-S	Negative sensing for remote sense
6	CS(Current Share)	Current Share
8	+S	Postive sensing for remote sense

MeanWell Direct, Orion House, Calleva Park, Aldermaston, Berkshire, RG7 8SN
Tel: +44 (0)118 9703858 Email: sales@meanwelldirect.co.uk

※Control Pin No. Assignment (CN3) : HRS DF11-10DP-2DS or equivalent

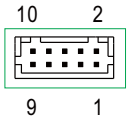

Mating Housing	HRS DF11-10DS or equivalent
Terminal	HRS DF11-**SC or equivalent

Pin No.	Function	Description
1	P OK GND	Power OK Ground
2	P OK	Power OK Signal (Relay Contact)
3	P OK GND2	Power OK Ground
4	P OK2	Power OK Signal (TTL Signal)
5	RCG	Remote ON-OFF Ground
6	RC	Remote ON-OFF
7	AUXG	Auxiliary Ground
8	AUX	Auxiliary Output
9	OLP	Overload(OLP) type select
10	OL-SD	

※AC Input Terminal Pin No. Assignment

Pin No.	Assignment	Diagram	Maximum mounting torque
1	AC/L	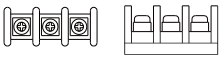	18Kgf-cm
2	AC/N		
3	FG ⏚		

■ Installation Manual

Please refer to : http://www.meanwell.com/webnet/search/InstallationSearch.html

MeanWell Direct, Orion House, Calleva Park, Aldermaston, Berkshire, RG7 8SN
Tel: +44 (0)118 9703858 Email: sales@meanwelldirect.co.uk