100W Single Output with PFC Function

EPP-100 series

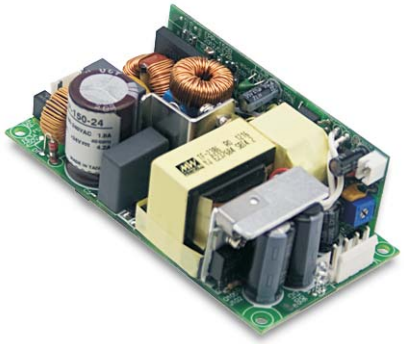

■ Features :

- 4"x2" Compact size
- Universal AC input / Full range
- Built-in active PFC function
- High efficiency up to 92.5%
- Protections: Short circuit / Overload / Over voltage/Over temperature
- 75W free air convection, 100W with 20CFM forced air
- LED indicator for power on
- No load power consumption<0.5W
- Built-in 12V/0.3A auxiliary output

SPECIFICATION

MODEL		EPP-100-12	EPP-100-15	EPP-100-24	EPP-100-27	EPP-100-48
OUTPUT	DC VOLTAGE	12V	15V	24V	27V	48V
	RATED CURRENT (convection)	6.3A	5A	3.2A	2.8A	1.6A
	RATED CURRENT (20CFM FAN)	8.5A	6.67A	4.2A	3.71A	2.1A
	CURRENT RANGE (convection)	0 ~ 6.3A	0 ~ 5A	0 ~ 3.2A	0 ~ 2.8A	0 ~ 1.6A
	CURRENT RANGE (20CFM FAN)	0 ~ 8.5A	0 ~ 6.67A	0 ~ 4.2A	0 ~ 3.71A	0 ~ 2.1A
	RATED POWER (convection)	75.6W	75W	76.8W	75.6W	76.8W
	RATED POWER (20CFM FAN)	102W	100.05W	100.8W	100.17W	100.8W
	RIPPLE & NOISE (max.) Note.2	120mVp-p	150mVp-p	240mVp-p	240mVp-p	300mVp-p
	VOLTAGE ADJ. RANGE	11.76 ~ 12.6V	14.7 ~ 15.75V	23.52 ~ 25.2V	26.46 ~ 28.35V	47.04 ~ 50.4V
	VOLTAGE TOLERANCE Note.3	±2.0%	±2.0%	±1.0%	±1.0%	±1.0%
	LINE REGULATION	±0.5%	±0.5%	±0.5%	±0.5%	±0.5%
	LOAD REGULATION	±1.0%	±1.0%	±1.0%	±1.0%	±1.0%
	SETUP, RISE TIME	1000ms, 30ms/230VAC 2000ms, 30ms/115VAC at full load				
	HOLD UP TIME (Typ.)	16ms/230VAC 16ms/115VAC at full load				
INPUT	VOLTAGE RANGE Note.5	90 ~ 264VAC 127 ~ 370VDC				
	FREQUENCY RANGE	47 ~ 63Hz				
	POWER FACTOR (Typ.)	PF>0.95/230VAC PF>0.98/115VAC at full load				
	EFFICIENCY (Typ.)	91%	91%	92%	92.5%	92.5%
	AC CURRENT (Typ.)	1.4A/115VAC 0.7A/230VAC				
	INRUSH CURRENT (Typ.)	COLD START 70A/230VAC				
	LEAKAGE CURRENT	<2mA/240VAC				
PROTECTION	OVER LOAD	105 ~ 145% rated output power				
		Protection type : Hiccup mode, recovers automatically after fault condition is removed				
	OVER VOLTAGE	13.2 ~ 15.6V	16.83 ~ 19.5V	27.7 ~ 31.5V	30.2 ~ 34.05V	51.3 ~ 62.7V
		Protection type : Shut down o/p voltage, re-power on to recover				
	OVER TEMPERATURE	110℃ ± 10℃ (RTH2), 110℃± 5℃(TSW2)				
		Protection type : Shut down o/p voltage, re-power on to recover				
FUNCTION	AUXILIARY POWER(AUX)	12V@0.3A for driving a fan, tolerance ± 10% at main output 100% load				
ENVIRONMENT	WORKING TEMP.	-30 ~ +70℃ (Refer to "Derating Curve")				
	WORKING HUMIDITY	20 ~ 90% RH non-condensing				
	STORAGE TEMP., HUMIDITY	-40 ~ +85℃, 10 ~ 95% RH				
	TEMP. COEFFICIENT	±0.03%/℃ (0 ~ 45℃)				
	VIBRATION	10 ~ 500Hz, 2G 10min./1cycle, period for 60min. each along X, Y, Z axes				
SAFETY & EMC (Note 4)	SAFETY STANDARDS	UL60950-1, TUV EN60950-1 approved				
	WITHSTAND VOLTAGE	I/P-O/P:3KVAC I/P-FG:2KVAC O/P-FG:0.5KVAC				
	ISOLATION RESISTANCE	I/P-O/P, I/P-FG, O/P-FG:100M Ohms / 500VDC/ 500VDC / 25℃/ 70% RH				
	EMC EMISSION	Compliance to EN55022 (CISPR22) Class B, EN61000-3-2,-3				
	EMC IMMUNITY	Compliance to EN61000-4-2,3,4,5,6,8,11, heavy industry level, criteria A				
OTHERS	MTBF	249.6Khrs min. MIL-HDBK-217F (25℃)				
	DIMENSION	101.6*50.8*29mm (L*W*H)				
	PACKING	0.2Kg; 72pcs/15.4Kg/0.82CUFT				
NOTE	1. All parameters NOT specially mentioned are measured at 230VAC input, rated load and 25℃ of ambient temperature. 2. Ripple & noise are measured at 20MHz of bandwidth by using a 12" twisted pair-wire terminated with a 0.1uf & 47uf parallel capacitor. 3. Tolerance : includes set up tolerance, line regulation and load regulation. 4. The power supply is considered a component which will be installed into a final equipment. The final equipment must be re-confirmed that it still meets EMC directives. 5. Derating may be needed under low input voltages. Please check the derating curve for more details.					

Mechanical Specification

Unit:mm

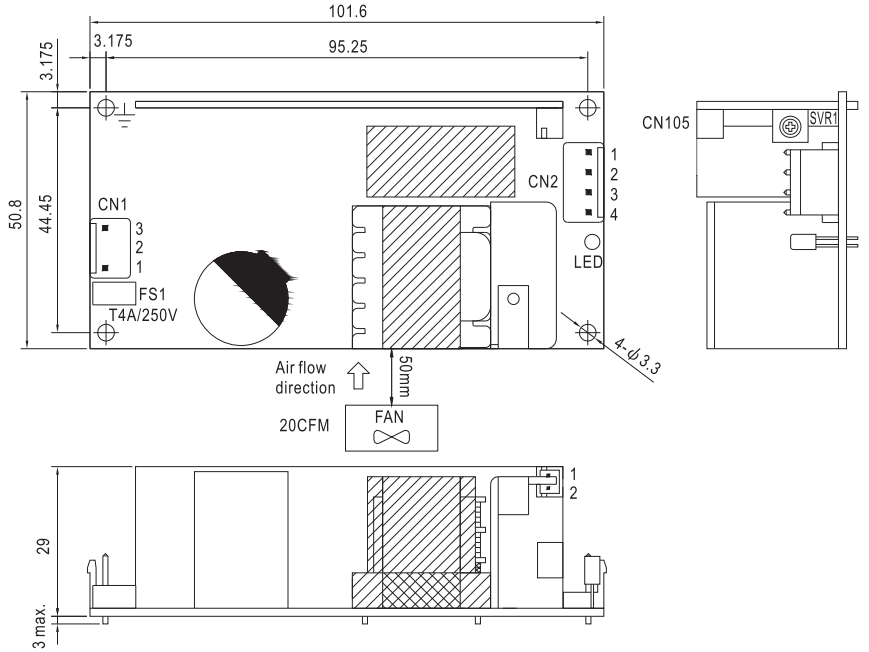

AC Input Connector (CN1) : JST B3P-VH or equivalent

Pin No.	Assignment	Mating Housing	Terminal
1	AC/L	JST VHR or equivalent	JST SVH-21T-P1.1 or equivalent
2	No Pin		
3	AC/N		

⏚ : Grounding required

DC Output Connector (CN2) : JST B4P-VH or equivalent

Pin No.	Assignment	Mating Housing	Terminal
1,2	DC COM	JST VHR or equivalent	JST SVH-21T-P1.1 or equivalent
3,4	+V		

FAN Connector(CN105) : JST B2B-PH-K-S or equivalent

Pin No.	Assignment	Mating Housing	Terminal
1	+12V	JST PHR-2 or equivalent	JST SPH-002T-P0.5S or equivalent
2	DC COM		

Block Diagram

PFC fosc : 47KHz
PWM fosc : 65KHz

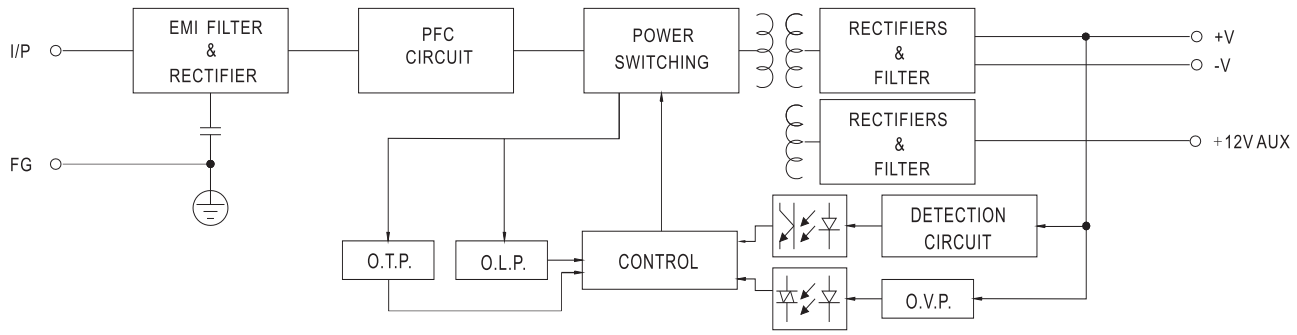

Output Derating

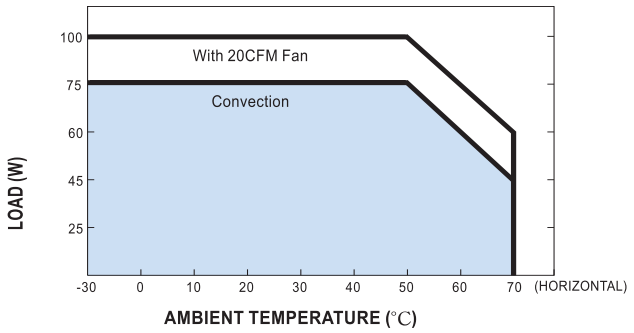

Output Derating VS Input Voltage

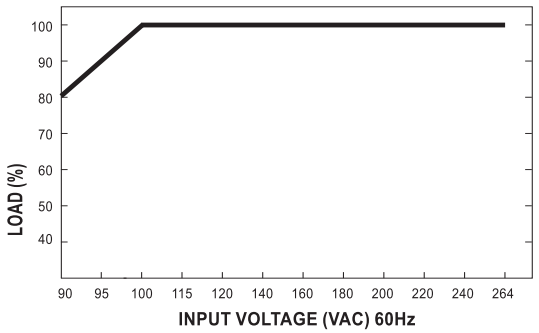

MeanWell Direct Tel: +44 (0)118 970 3858 E-mail: sales@meanwelldirect.co.uk