300W Single Output with PFC Function

EPP-300 series

■ Features :

- Universal AC input / Full range
- Built-in active PFC function
- Wistand 300VAC surge input for 5 seconds
- Protections: Short circuit / Overload / Over voltage / Over temperature
- Built-in 12V/0.5A auxiliary output
- 5"x3" compact size
- Free air convection for 200W and 300W with 20.5 CFM forced air
- With power good and fail signal output
- Built-in remote sense function
- No load power consumption under 0.5W by PS-ON control
- Standby 5V@1A with fan @ 0.6A without fan

SPECIFICATION

MODEL		EPP-300-12	EPP-300-15	EPP-300-24	EPP-300-27	EPP-300-48
OUTPUT	DC VOLTAGE	12V	15V	24V	27V	48V
	RATED CURRENT (20.5CFM)	25A	20A	12.5A	11.12A	6.25A
	CURRENT RANGE (convection)	0 ~ 16.67A	0 ~ 13.33A	0 ~ 8.33A	0 ~ 7.4A	0 ~ 4.17A
	CURRENT RANGE (20.5CFM)	0 ~ 25A	0 ~ 20A	0 ~ 12.5A	0 ~ 11.12A	0 ~ 6.25A
	RATED POWER (convection)	200W	200W	200W	200W	200W
	RATED POWER (20.5CFM)	300W	300W	300W	300.24W	300W
	RIPPLE & NOISE (max.) Note.2	120mVp-p	120mVp-p	150mVp-p	200mVp-p	250mVp-p
	VOLTAGE ADJ. RANGE	Main output:11.4 ~ 12.6V	Main output:14.25 ~ 15.75V	Main output:22.8 ~ 25.2V	Main output:25.65 ~ 28.35V	Main output:45.6 ~ 50.4V
	VOLTAGE TOLERANCE Note.3	±3.0%	±3.0%	±2.0%	±2.0%	±2.0%
	LINE REGULATION	±0.5%	±0.5%	±0.5%	±0.5%	±0.5%
	LOAD REGULATION	±1.0%	±1.0%	±1.0%	±1.0%	±1.0%
	SETUP, RISE TIME	2500ms, 30ms/230VAC 3000ms, 30ms/115VAC at full load				
	HOLD UP TIME (Typ.)	13ms/230VAC/115VAC at full load				
INPUT	VOLTAGE RANGE Note.5	90 ~ 264VAC 127 ~ 370VDC				
	FREQUENCY RANGE	47 ~ 63Hz				
	POWER FACTOR (Typ.)	PF>0.93/230VAC PF>0.98/115VAC at full load				
	EFFICIENCY (Typ.)	90%	90%	92.5%	93%	93%
	AC CURRENT (Typ.)	3.5A/115VAC 1.8A/230VAC				
	INRUSH CURRENT (Typ.)	COLD START 40A/115VAC 80A/230VAC				
	LEAKAGE CURRENT	<2mA/240VAC				
PROTECTION	OVERLOAD	105 ~ 135% rated output power				
		Protection type : Hiccup mode, recovers automatically after fault condition is removed				
	OVER VOLTAGE	13.5 ~ 15V	16.2 ~ 18.5V	26 ~ 30V	29.5 ~ 33.5V	52 ~ 59.5V
		Protection type : Shut down o/p voltage, re-power on to recover				
	OVER TEMPERATURE	110℃±5℃(TSW1) detect on heatsink of power transistor				
		115±5℃(12V,15V),85±5℃(24V,27V,48V) (TSW2) detect on heatsink of output diode				
		Protection type : (TSW1)Shut down o/p voltage, recovers automatically after temperature goes down				
		Protection type : (TSW2)Shut down o/p voltage, re-power on to recover				
FUNCTION	5V STANDBY	5VSB : 5V@0.6A without fan, 1A with fan 20.5CFM ; tolerance ± 2%, ripple : 150mVp-p(max.)				
	AUXILIARY POWER (AUX)	12V@0.5A for driving a fan ; tolerance $\pm^{10}_{15}$%				
	PS-ON INPUT SIGNAL	Power on: PS-ON = "Hi" or " > 2 ~ 5V" ; Power off: PS-ON = "Low" or " < 0 ~ 0.5V"				
	POWER GOOD / POWER FAIL	500ms>PG>10ms ; The TTL signal goes high with 10ms to 500ms delay after power set up ; The TTL signal goes low at least 1ms before Vo below 90% of rated value				
ENVIRONMENT	WORKING TEMP.	-30 ~ +70℃ (Refer to "Derating Curve")				
	WORKING HUMIDITY	20 ~ 90% RH non-condensing				
	STORAGE TEMP., HUMIDITY	-40 ~ +85℃ , 10 ~ 95% RH				
	TEMP. COEFFICIENT	±0.03%/℃(0 ~ 50℃)				
	VIBRATION	10 ~ 500Hz, 2G 10min./1cycle, 60min. each along X, Y, Z axes				
SAFETY & EMC (Note 4)	SAFETY STANDARDS	UL60950-1, TUV EN60950-1 approved				
	WITHSTAND VOLTAGE	I/P-O/P:3KVAC I/P-FG:2KVAC O/P-FG:0.5KVAC				
	ISOLATION RESISTANCE	I/P-O/P, I/P-FG, O/P-FG:100M Ohms / 500VDC / 25℃70% RH				
	EMC EMISSION	Compliance to EN55011 (CISPR11), EN55022 (CISPR22),Conduction:Class B,Radiation Class A;EN61000-3-2,-3				
	EMC IMMUNITY	Compliance to EN61000-4-2,3,4,5,6,8,11, EN55024, EN60601-1-2, criteria A				
OTHERS	MTBF	160Khrs min. MIL-HDBK-217F (25℃)				
	DIMENSION	127*76.2*35mm (L*W*H)				
	PACKING	0.37 Kg; 36pcs/14.3Kg/1.03CUFT;				
NOTE	1. All parameters NOT specially mentioned are measured at 230VAC input, rated load and 25℃of ambient temperature. 2. Ripple & noise are measured at 20MHz of bandwidth by using a 12" twisted pair-wire terminated with a 0.1uf & 47uf parallel capacitor. 3. Tolerance : includes set up tolerance, line regulation and load regulation. 4. The power supply is considered a component which will be installed into a final equipment. The final equipment must be re-confirmed that it still meets EMC directives. For guidance on how to perform these EMC tests, please refer to "EMI testing of component power supplies." (as available on http://www.meanwell.com) 5. Derating may be needed under low input voltages. Please check the derating curve for more details. 6. Heat Sink HS1,HS2 can not be shorted.					

■ Mechanical Specification

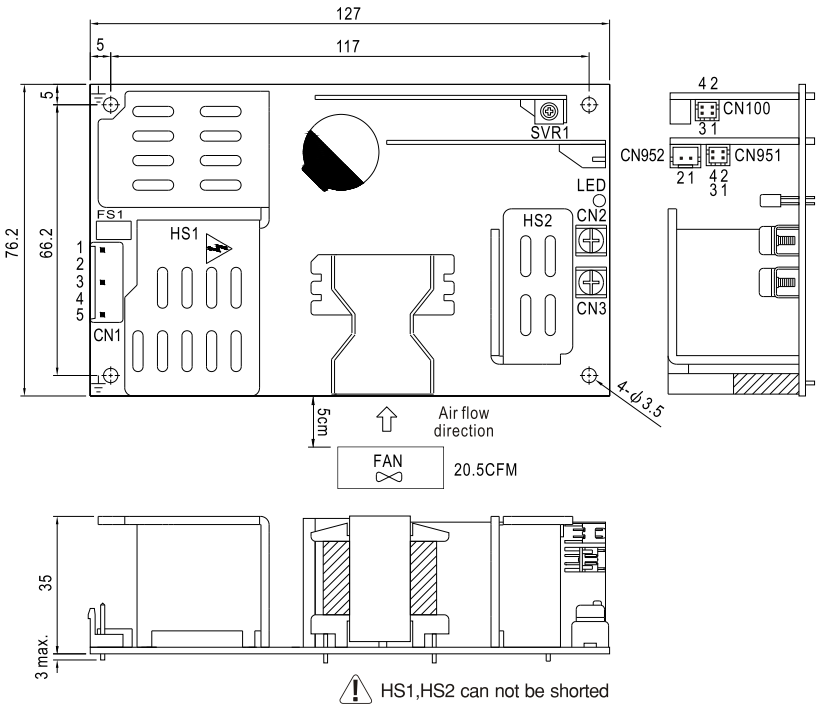

Unit:mm

AC Input Connector (CN1) : JST B5P-VH or equivalent

Pin No.	Assignment	Mating Housing	Terminal
1	AC/N	JST VHR or equivalent	JST SVH-21T-P1.1 or equivalent
2,4	No Pin		
3	AC/L		
5	FG ⏚		

DC Output Connector (CN2,CN3)

Pin No.	Assignment	Output Terminals
CN2	-V	M4 Pan HD screw in 2 positions
CN3	+V	Torque to 8 lbs-in(90cNm)max.

Function Connector(CN100):JST S4B-PHDSS or equivalent

Pin No.	Status	Mating Housing	Terminal
1	-S	JST PHDR-8VS or equivalent	JST SPHD-001T-P0.5 or equivalent
2	+S		
3	DC COM		
4	PG		

Function Connector(CN951):JST S4B-PHDSS or equivalent

Pin No.	Status	Mating Housing	Terminal
1	5VSB	JST PHDR-8VS or equivalent	JST SPHD-001T-P0.5 or equivalent
2,4	DC COM		
3	PS-ON		

FAN Connector(CN952) : JST S2B-XH or equivalent

Pin No.	Assignment	Mating Housing	Terminal
1	DC COM	JST XHP or equivalent	JST SXH-001T-P0.6 or equivalent
2	+12V		

■ Block Diagram

PFC fosc : 65KHz
PWM fosc : 70KHz

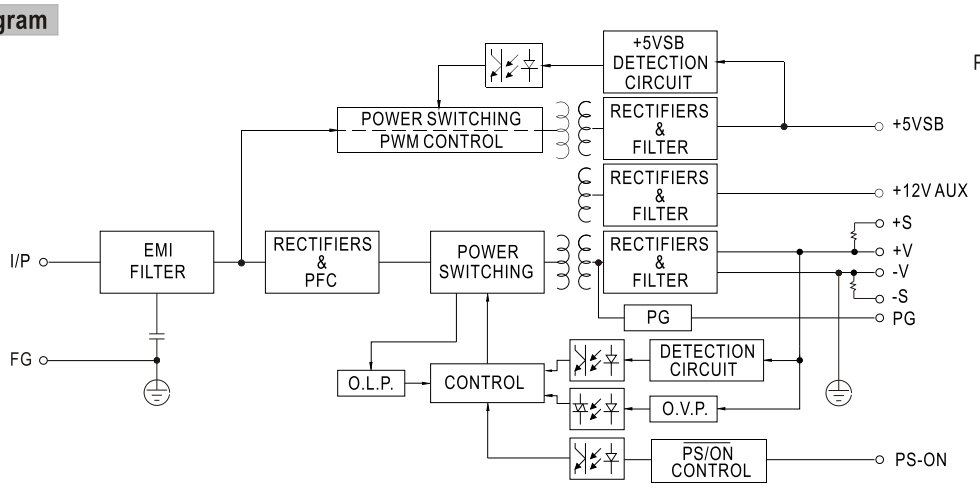

■ Derating Curve

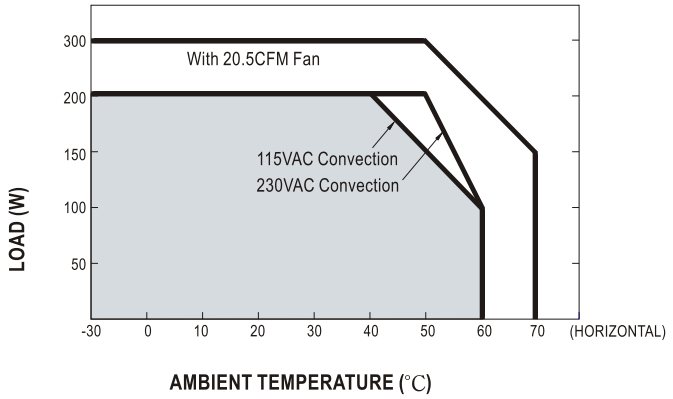

■ Output Derating VS Input Voltage

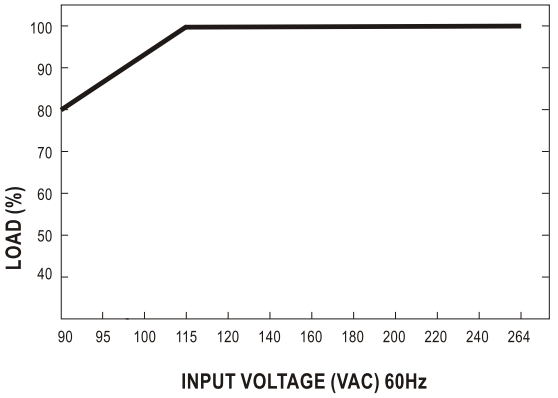

MeanWell Direct Tel: +44 (0)118 970 3858 E-mail: sales@meanwelldirect.co.uk