60W Single Output Switching Power Supply

DRA-60 series

Features

- Universal AC input / Full range
- Protections: Short circuit / Overload / Over voltage
- Can be installed on DIN rail TS-35/7.5 or 15
- Built-in 3 in 1 dimming function
  (1~10Vdc or PWM signal or resistance)
- Cooling by free air convection
- LED indicator for power on
- 100% full load burn-in test
- 3 years warranty

Applications

- Machine vision inspection system
- Plant cultivation system

Description

DRA-60 is one 60W DIN Rail power supply, targeting the LED driving applications in industrial inspection apparatus field. This series provides a full range constant current output and is equipped with the built-in 3 in 1 dimming function- based on the requirement, the users are able to easily make or change the setup to adjust the LED light intensity via one of the three methodologies, 1~10VDC, PWM signal or resistance. This model can be mounted on DIN Rail TS-35/7.5 or 15; in addition, the width of the unit is only 40mm that it is well suited for the installation in a limited spacing. DRA-60 adopts the universal AC input between 90VAC and 264VAC; the efficiency is up to 87% that the entire series can operate, under free air convection, from -30℃ through 70℃.

Model Encoding

DRA - 60 - 12

- 12 — Output voltage
- 60 — Output wattage
- DRA — Series name

MeanWell Direct
Tel: +44 (0)118 970 3858 E-mail: sales@meanwelldirect.co.uk

SPECIFICATION

MODEL		DRA-60-12	DRA-60-24
OUTPUT	DC VOLTAGE	12V	24V
	RATED CURRENT	5A	2.5A
	CURRENT RANGE	0 ~ 5A	0 ~ 2.5A
	RATED POWER	60W	60W
	RIPPLE & NOISE (max.) Note.2	120mVp-p	150mVp-p
	VOLTAGE ADJ. RANGE	12 ~ 15V	24 ~ 30V
	VOLTAGE TOLERANCE Note.3	±1.0%	±1.0%
	LINE REGULATION	±0.5%	±0.5%
	LOAD REGULATION	±0.5%	±0.5%
	SETUP, RISE TIME Note.4	400ms, 50ms/230VAC 800ms, 50ms/115VAC at full load	
	HOLD UP TIME (Typ.)	50ms/230VAC 10ms/115VAC at full load	
INPUT	VOLTAGE RANGE	90 ~ 264VAC 127 ~ 370VDC [DC input operation possible by connecting AC/L(+), AC/N(-)]	
	FREQUENCY RANGE	47 ~ 63Hz	
	EFFICIENCY (Typ.)	85%	87%
	AC CURRENT (Typ.)	1.3A/115VAC 0.8A/230VAC	
	INRUSH CURRENT (Typ.)	COLD START 30A/115VAC 60A/230VAC	
PROTECTION	OVERLOAD	95 ~ 108% rated output power	
		Protection type : Constant current limiting, recovers automatically after fault condition is removed	
	OVER VOLTAGE	14.49 ~ 18.63V	28.98 ~ 37.26V
		Protection type : Shut down o/p voltage, re-power on to recover	
ENVIRONMENT	WORKING TEMP.	-30 ~ +70℃ (Refer to "Derating Curve")	
	WORKING HUMIDITY	20 ~ 90% RH non-condensing	
	STORAGE TEMP., HUMIDITY	-40 ~ +85℃, 10 ~ 95% RH	
	TEMP. COEFFICIENT	±0.03%/℃ (0 ~ 50℃) on output	
	VIBRATION	10 ~ 500Hz, 2G 10min./1cycle, 60min. each along X, Y, Z axes	
SAFETY & EMC (Note 5)	SAFETY STANDARDS	UL60950-1, TUV EN60950-1 approved	
	WITHSTAND VOLTAGE	I/P-O/P:3KVAC I/P-FG:2KVAC O/P-FG:0.5KVAC	
	ISOLATION RESISTANCE	I/P-O/P, I/P-FG, O/P-FG:100M Ohms / 500VDC / 25℃/ 70% RH	
	EMC EMISSION	Compliance to EN55022 (CISPR22) Class B, EN61000-3-2,-3	
	EMC IMMUNITY	Compliance to EN61000-4-2,3,4,5,6,8,11, EN55024, EN61204-3, light industry level, criteria A	
OTHERS	MTBF	386.1K hrs min. MIL-HDBK-217F (25℃)	
	DIMENSION	40*90*100mm (W*H*D)	
	PACKING	0.3Kg; 42pcs/13.6Kg/0.82CUFT	
NOTE	1. All parameters NOT specially mentioned are measured at 230VAC input, rated load and 25℃ of ambient temperature. 2. Ripple & noise are measured at 20MHz of bandwidth by using a 12" twisted pair-wire terminated with a 0.1uf & 47uf parallel capacitor. 3. Tolerance : includes set up tolerance, line regulation and load regulation. 4. Length of set up time is measured at cold first start. Turning ON/OFF the power supply may lead to increase of the set up time. 5. The power supply is considered a component which will be installed into a final equipment. The final equipment must be re-confirmed that it still meets EMC directives. For guidance on how to perform these EMC tests, please refer to "EMI testing of component power supplies." (as available on http://www.meanwell.com)		

MeanWell Direct
Tel: +44 (0)118 970 3858 E-mail: sales@meanwelldirect.co.uk

■ Block Diagram

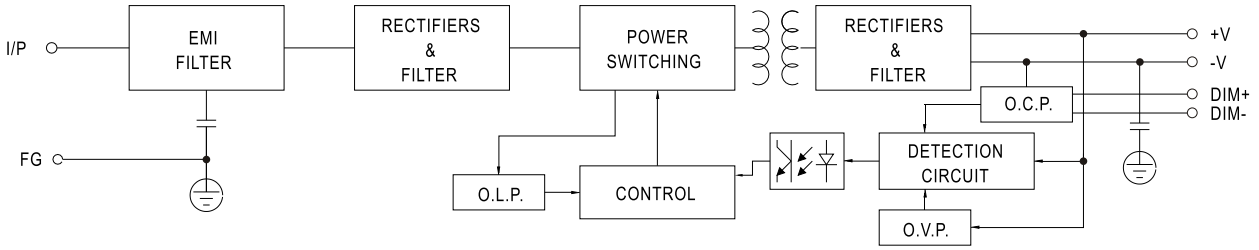

■ Derating Curve

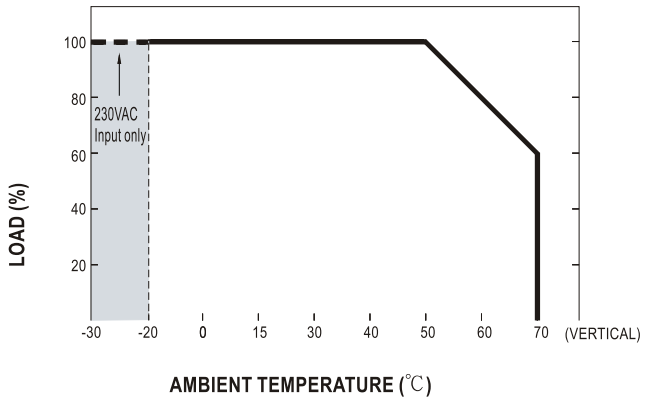

■ Static Characteristics

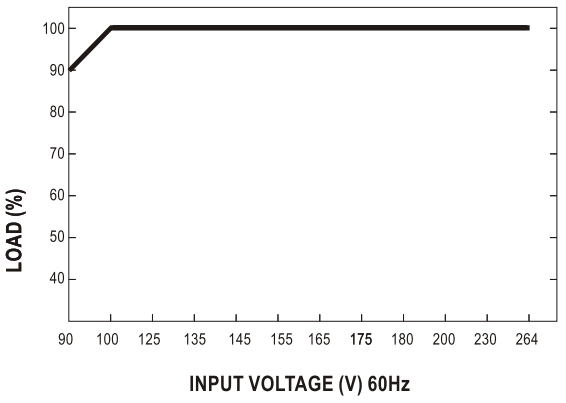

■ LED DIMMING/Io TRIMMING OPERATION

※ Built-in 3 in 1 dimming function or Io trim function. Output constant current level can be adjusted connecting a resistance or 1 ~ 10Vdc or 10V PWM signal between DIM+ and DIM-.

※ Please DO NOT connect "DIM-" to "-V".

※ Reference resistance value for output current adjustment (Typical)

Resistance value	Single driver	10KΩ	20KΩ	30KΩ	40KΩ	50KΩ	60KΩ	70KΩ	80KΩ	90KΩ	100KΩ	OPEN
	Multiple drivers (N=driver quantity for synchronized dimming operation)	10KΩ/N	20KΩ/N	30KΩ/N	40KΩ/N	50KΩ/N	60KΩ/N	70KΩ/N	80KΩ/N	90KΩ/N	100KΩ/N	-----
Percentage of rated current		10%	20%	30%	40%	50%	60%	70%	80%	90%	100%	102%~108%

※ 1 ~ 10V dimming function for output current adjustment (Typical)

Dimming value	1V	2V	3V	4V	5V	6V	7V	8V	9V	10V	OPEN
Percentage of rated current	10%	20%	30%	40%	50%	60%	70%	80%	90%	100%	102%~108%

※ 10V PWM signal for output current adjustment (Typical): Frequency range :100Hz ~ 3KHz

Duty value	10%	20%	30%	40%	50%	60%	70%	80%	90%	100%	OPEN
Percentage of rated current	10%	20%	30%	40%	50%	60%	70%	80%	90%	100%	102%~108%

※Direct connecting to LEDs is suggested, but is not suitable for using additional drivers.

MeanWell Direct
Tel: +44 (0)118 970 3858 E-mail: sales@meanwelldirect.co.uk

※Using the built-in dimming function can't turn the lighting fixture totally dark. Please refer to the connection method below to achieve 0% brightness of the lighting fixture connecting to the LED power supply unit.

Using a switch and relay can turn ON/OFF the lighting fixture.

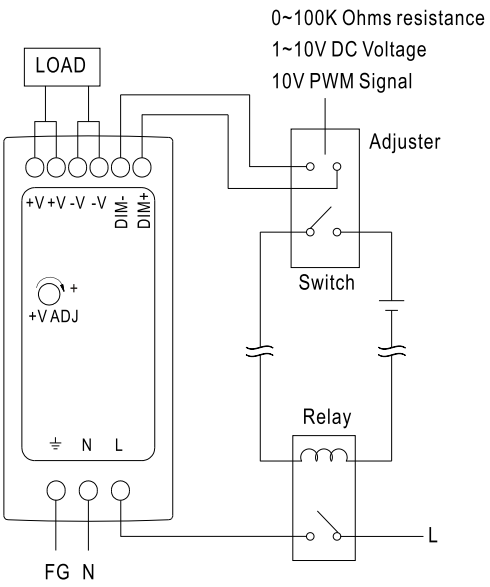

■ Mechanical Specification

Case No.962A Unit:mm

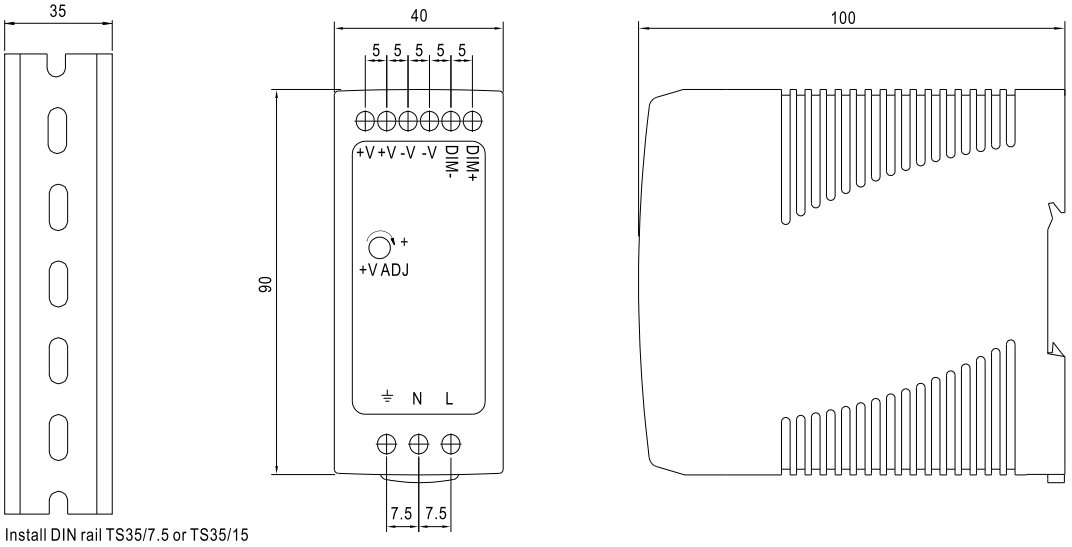

Install DIN rail TS35/7.5 or TS35/15

■ Installation Manual

Please refer to : http://www.meanwell.com/webnet/search/InstallationSearch.html

MeanWell Direct
Tel: +44 (0)118 970 3858 E-mail: sales@meanwelldirect.co.uk