400W Reliable Green Medical Power Supply

RPS-400 series

ANSI/AAMI ES60601-1 EN60601-1 IEC60601-1

ECO Medical 2xMOPP BF rated

Features

- 5"×3" compact size
- Medical safety approved (2 x MOPP) accroding to AAMI/ANSI ES60601-1 and IEC/EN60601-1
- Suitable for BF application with appropriate system configuration
- 250W convection,400W force air
- EMI Class B for Class I and Class A for Class II configuration
- No load power consumption<0.5W by PS-ON control
- 5Vdc standby output, 12Vdc fan supply, Power Good, Power Fail and remote sense
- Protections: Short circuit / Overload / Over voltage / Over temperature
- Typical Lifetime

Type	RPS-400	RPS-400-C	RPS-400-TF	RPS-400-SF
Without Fan Watt	>71K hours	>28K hours	---	---
With Fan Watt	>98K hours	>37K hours	>69K hours	>57K hours

- 3 years warranty

Applications

- Oral irrigator
- Hemodialysis machine
- Medical computer monitors
- Sleep apnea devices
- Pump machine

Description

RPS-400 is a 400W highly reliable green PCB type medical power supply with a high power density on the 5" by 3" footprint. It accepts 80~264VAC input and offers various output voltages between 12V and 48V. The working efficiency is up to 94% and the extremely low no load power consumption is down below 0.5W. RPS-400 is able to be used for both Class I (with FG) or Class II (no FG) system design. The extremely low leakage current is less than 250μA. In addition, it conforms to international medical regulations (2*MOPP) and EMC EN55011, perfectly fitting all kinds of BF rated "patient contact" medical system equipment. RPS-400 series also offers the enclosed style models(-C / TF /SF)

Model Encoding

RPS - 400 - 12 -C

- -C: Type
- 12: Output voltage
- 400: Output wattage
- RPS: Series name

Type	Description	Note
Blank	PCB Type	In stock
C	Enclosed casing Type	In stock
TF	Enclosed Type with fan on the top	In stock
SF	Enclosed Type with fan on the side	In stock

SPECIFICATION

MODEL			RPS-400-12□	RPS-400-15□	RPS-400-18□	RPS-400-24	RPS-400-27□	RPS-400-36□	RPS-400-48□
OUTPUT	DC VOLTAGE		12V	15V	18V	24V	27V	36V	48V
	CURRENT	25CFM	33.3A	26.7A	22.3A	16.7A	14.9A	11.2A	8.4A
		Convection	20.8A	16.7A	13.9A	10.5A	9.3A	7A	5.3A
	RATED POWER	25CFM	399.6W	400.5W	401.4W	400.8W	402.3W	403.2W	403.2W
		Convection	249.6W	250.5W	250.2W	252W	251.1W	252W	254.4W
	RIPPLE & NOISE (max.) Note.2		120mVp-p	150mVp-p	180mVp-p	200mVp-p	200mVp-p	250mVp-p	250mVp-p
	VOLTAGE ADJ. RANGE(MAIN OUTPUT)		11.4~12.6V	14.3~15.8V	17.1~18.9V	22.8~25.2V	25.6 ~ 28.4V	34.2 ~37.8V	45.6 ~50.4V
	VOLTAGE TOLERANCE Note.3		±3.0%	±3.0%	±3.0%	±2.0%	±1.0%	±1.0%	±1.0%
	LINE REGULATION		±0.5%	±0.5%	±0.5%	±0.5%	±0.5%	±0.5%	±0.5%
	LOAD REGULATION		±1.0%	±1.0%	±1.0%	±1.0%	±1.0%	±1.0%	±1.0%
	SETUP, RISE TIME		1000ms, 30ms/230VAC 1500ms, 30ms/115VAC at full load						
	HOLD UP TIME (Typ.)		16ms/230VAC 12ms/115VAC at full load						
INPUT	VOLTAGE RANGE Note.4		80 ~ 264VAC 113 ~ 370VDC						
	FREQUENCY RANGE		47 ~ 63Hz						
	POWER FACTOR		PF>0.94/230VAC PF>0.98/115VAC at full load						
	EFFICIENCY (Typ.)		91.5%	92%	93%	93%	93.5%	93%	94%
	AC CURRENT (Typ.)		4.2A/115VAC 2.1A/230VAC						
	INRUSH CURRENT (Typ.)		COLD START 40A/115VAC 80A/230VAC						
	LEAKAGE CURRENT (max.) Note.5		Earth leakage current <250μA/264VAC , Touch current < 100μA/264VAC						
PROTECTION	OVERLOAD		105 ~ 135% rated output power						
			Protection type : Hiccup mode, recovers automatically after fault condition is removed						
	OVER VOLTAGE		13.2 ~ 15.6V	16.5 ~ 19.5V	19.8 ~ 31.2V	26.4 ~ 31.2V	29.7 ~ 35.1V	39.6 ~ 46.8V	52.8 ~ 62.4V
			Protection type : Shut down o/p voltage, re-power on to recover						
	OVER TEMPERATURE		Protection type : Shut down o/p voltage, recovers automatically after temperature goes down						
FUNCTION	5V STANDBY		5Vsb : 5V@0.6A without fan, 1A with fan 25CFM ; Tolerance ±2%, ripple : 120mVp-p(max.)						
	FAN SUPPLY		12V@0.5A for driving a fan ; Tolerance ±10%						
	PS-ON INPUT SIGNAL		Power on: PS-ON = "Hi" or " > 2 ~ 5V" ; Power off: PS-ON = "Low" or " < 0 ~ 0.5V"						
	POWER GOOD / POWER FAIL		500ms>PG>10ms ; The TTL signal goes high with 10ms to 500ms delay after power set up ; The TTL signal goes low at least 1ms before Vo below 90% of rated value						
ENVIRONMENT	WORKING TEMP.		-30 ~ +70℃ (Refer to "Derating Curve")						
	WORKING HUMIDITY		20 ~ 90% RH non-condensing						
	STORAGE TEMP., HUMIDITY		-40 ~ +85℃, 10 ~ 95% RH non-condensing						
	TEMP. COEFFICIENT		±0.03%/℃ (0 ~ 50℃)						
	VIBRATION		10 ~ 500Hz, 2G 10min./1cycle, 60min. each along X, Y, Z axes						
	OPERATING ALTITUDE Note.6		4000 meters						

MeanWell Direct, Orion House, Calleva Park, Aldermaston, Berkshire, RG7 8SN
Tel: +44 (0)118 9703858 Email: sales@meanwelldirect.co.uk

SPECIFICATION

SAFETY & EMC (Note 7)	SAFETY STANDARDS	IEC60601-1, TUV EN60601-1, UL AAMI / ANSI ES60601-1 (3.1 version), CAN/CSA-C22 3rd edition approved				
	ISOLATION LEVEL	Primary-Secondary: 2xMOPP, Primary-Earth:1xMOPP, Secondary-Earth:1xMOPP				
	WITHSTAND VOLTAGE	I/P-O/P:4KVAC I/P-FG:2KVAC O/P-FG:1.5KVAC				
	ISOLATION RESISTANCE	I/P-O/P, I/P-FG:100M Ohms / 500VDC / 25℃/ 70% RH				
	EMC EMISSION	**Parameter**	**Standard**	**Test Level / Note**		
		Conducted	EN55011 (CISPR11)	Class B		
		Radiated	EN55011 (CISPR11)	Class B		
		Harmonic Current	EN61000-3-2	Class A		
		Voltage Flicker	EN61000-3-3	-----		
	EMC IMMUNITY	EN55024 , EN60601-1-2, EN61204-3				
		Parameter	**Standard**	**Test Level / Note**		
		ESD	EN61000-4-2	Level 4, 15KV air ; Level 4, 8KV contact		
		Radiated	EN61000-4-3	Level 3		
		EFT / Burst	EN61000-4-4	Level 3		
		Surge	EN61000-4-5	Level 3, 2KV/Line-FG ; 1KV/Line-Line		
		Conducted	EN61000-4-6	Level 3		
		Magnetic Field	EN61000-4-8	Level 4		
		Voltage Dips and Interruptions	EN61000-4-11	100% dip 1 periods, 30% dip 25 periods, 100% interruptions 250 periods		
OTHERS	MTBF	194.1Khrs min. MIL-HDBK-217F (25℃)				
	DIMENSION	Type	RPS-400	RPS-400-C	RPS-400-TF	RPS-400-SF
		L*W*H	127*76.2*35mm	130*86.6*43mm	130*86.6*66.5mm	151*86.6*43mm
	PACKING	P.W.	0.39Kg	0.51Kg	0.58Kg	0.64Kg
		Q'TY	36pcs	24pcs	24pcs	24pcs
		G.W.	15Kg	13.2Kg	14.9Kg	16.4Kg
		M'MENT	1.03CUFT	0.77CUFT	0.86CUFT	0.91CUFT

NOTE

1. All parameters NOT specially mentioned are measured at 230VAC input, rated load and 25 of ambient temperature.
2. Ripple & noise are measured at 20MHz of bandwidth by using a 12" twisted pair-wire terminated with a 0.1uf & 47uf parallel capacitor.
3. Tolerance : includes set up tolerance, line regulation and load regulation.
4. Derating may be needed under low input voltages. Please check the derating curve for more details.
5. Touch current was measured from primary input to DC output.
6. The ambient temperature derating of 2.5℃/ 1000m is needed for operating altitude greater than 2000m(6500ft).
7. The power supply is considered a component which will be installed into a final equipment. All the Class I (with FG) EMC tests are executed by mounting the unit on a 360mm*360mm metal plate with 1mm of thickness. The Class II (without FG) EMC tests are executed by mounting the unit on a 130mm*86.6mm metal plate with 1mm of thickness. The final equipment must be re-confirmed that it still meets EMC directives. For guidance on how to perform these EMC tests, please refer to "EMI testing of component power supplies."

MeanWell Direct, Orion House, Calleva Park, Aldermaston, Berkshire, RG7 8SN
Tel: +44 (0)118 9703858 Email: sales@meanwelldirect.co.uk

■ Block Diagram

PFC fosc : 90KHz
PWM fosc : 100KHz

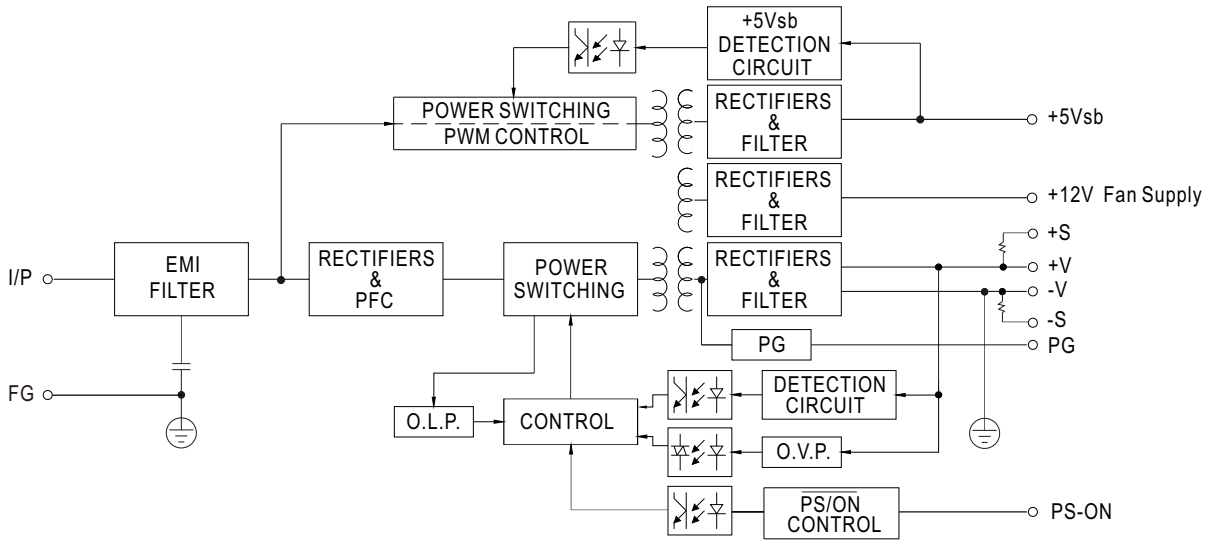

■ Output Derating vs Input Voltage

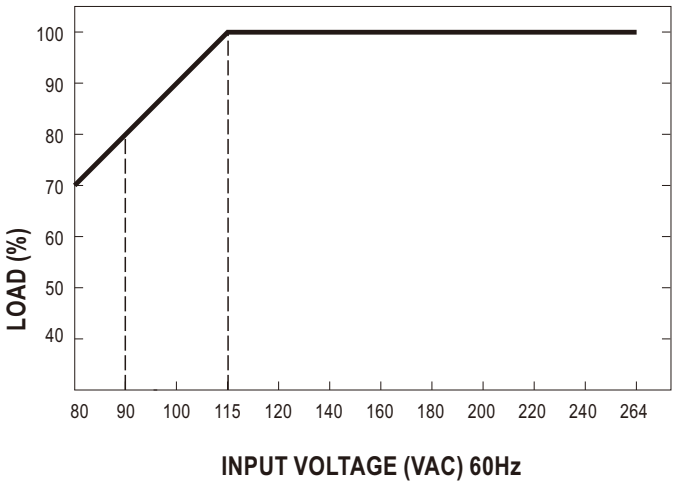

MeanWell Direct, Orion House, Calleva Park, Aldermaston, Berkshire, RG7 8SN
Tel: +44 (0)118 9703858 Email: sales@meanwelldirect.co.uk

■ Derating Curve

◎ RPS-400 & RPS-400-C

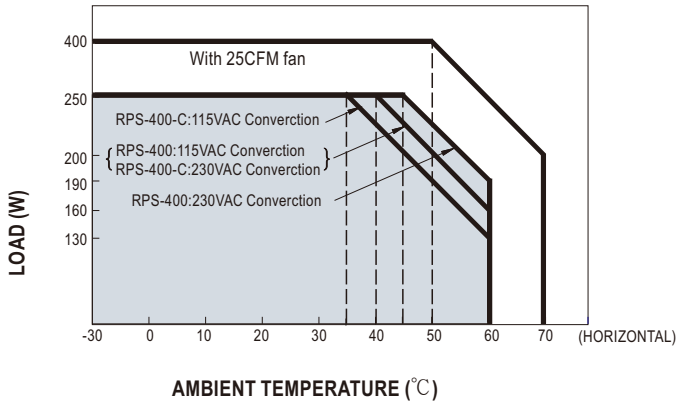

◎ RPS-400-TF/SF

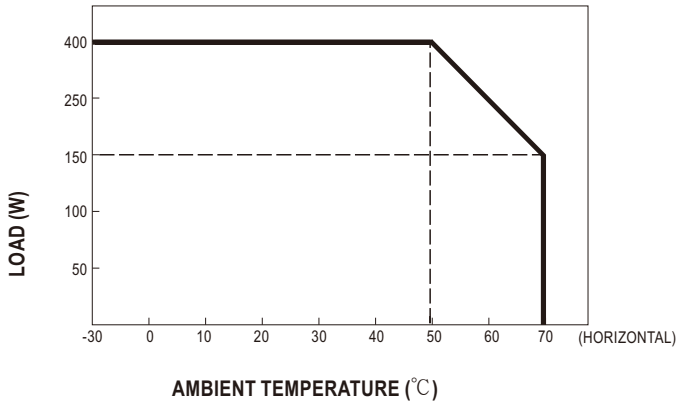

Order No.	RPS-400	RPS-400-C	RPS-400-TF	RPS-400-SF
Photo				
Without Fan Watt	250W	250W	---	---
With Fan Watt	400W	400W	400W	400W

MeanWell Direct, Orion House, Calleva Park, Aldermaston, Berkshire, RG7 8SN
Tel: +44 (0)118 9703858 Email: sales@meanwelldirect.co.uk

■ Mechanical Specification

● RPS-400 (PCB Type)

Top View

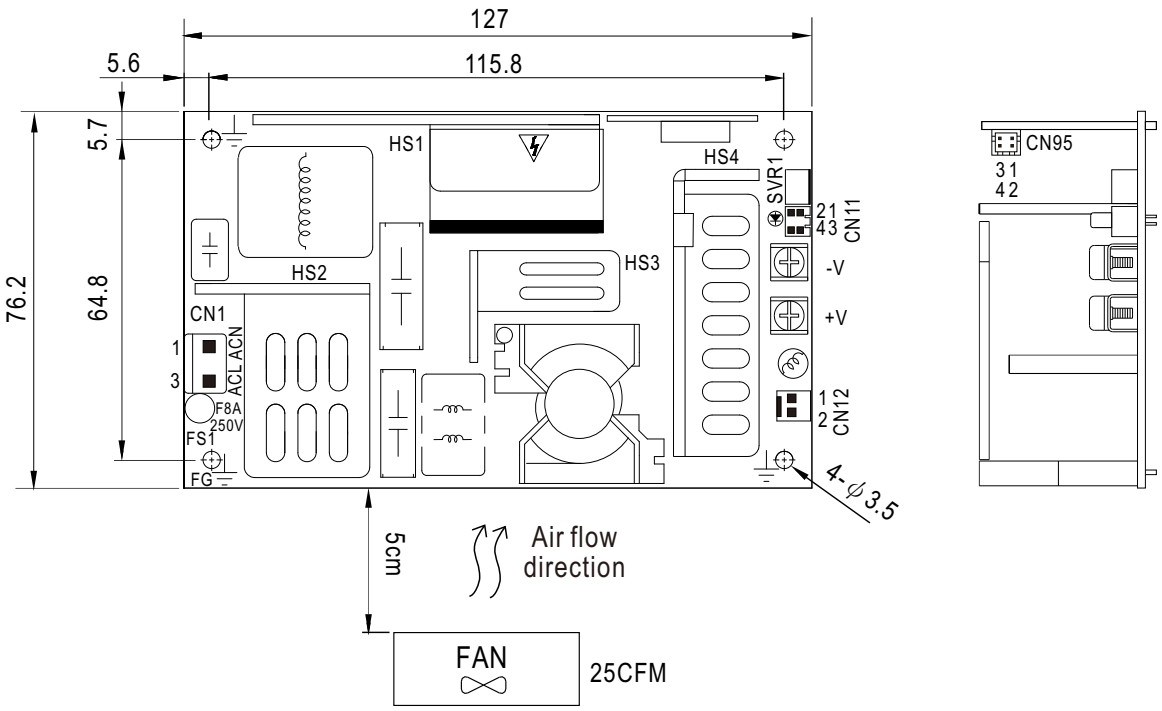

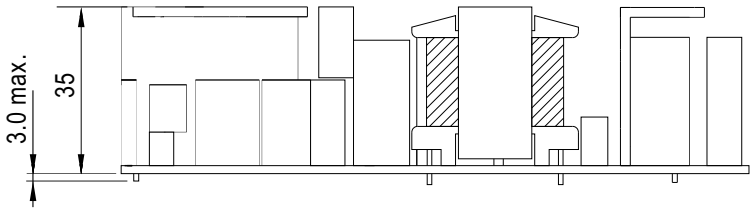

Side View

MeanWell Direct, Orion House, Calleva Park, Aldermaston, Berkshire, RG7 8SN
Tel: +44 (0)118 9703858 Email: sales@meanwelldirect.co.uk

RPS-400-C (Enclosed type)

Case No. 247A Unit:mm

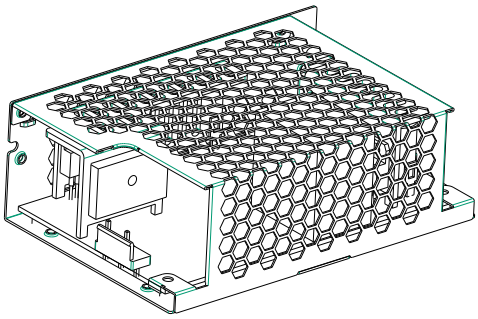

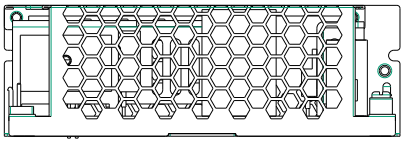

Side View

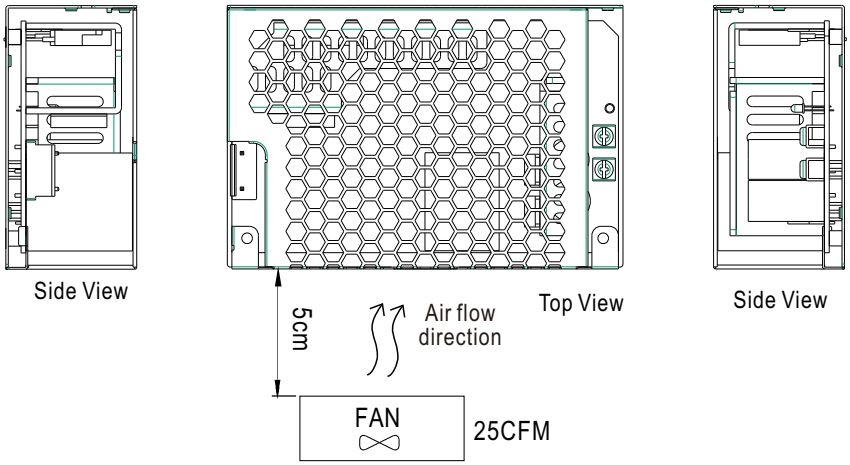

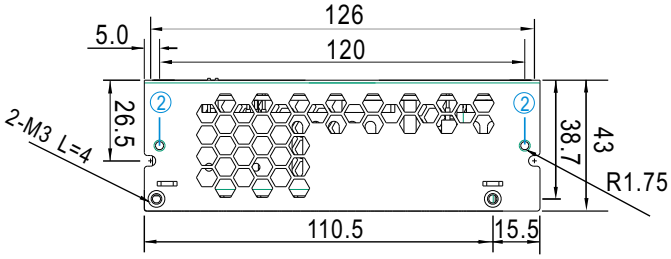

Side View

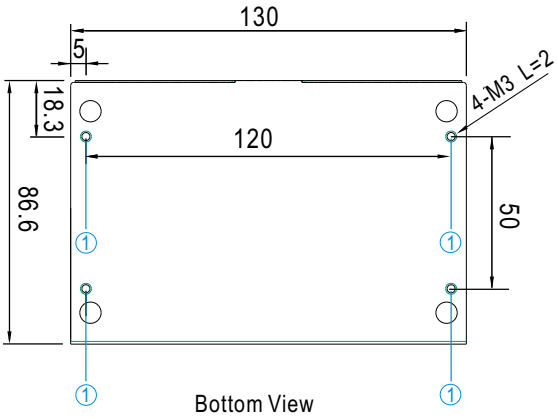

Bottom View

RPS-400-TF (Enclosed type with fan on the top)

Case No. 247A-D 247B-T Unit:mm

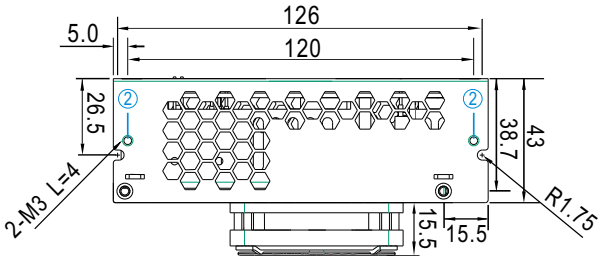

Side View

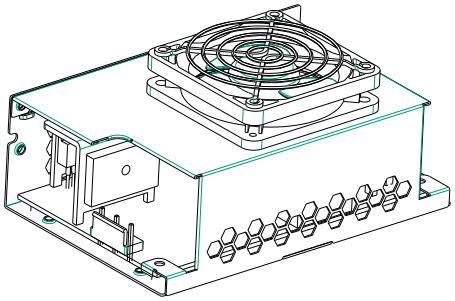

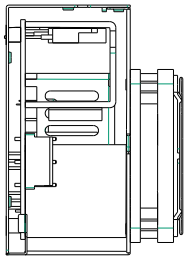

Side View

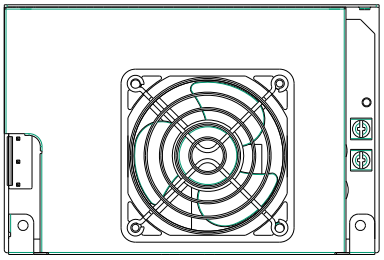

Top View

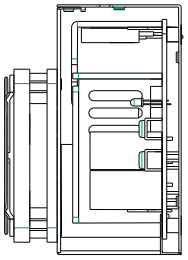

Side View

Air flow direction

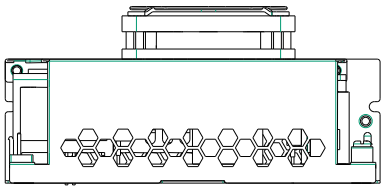

Side View

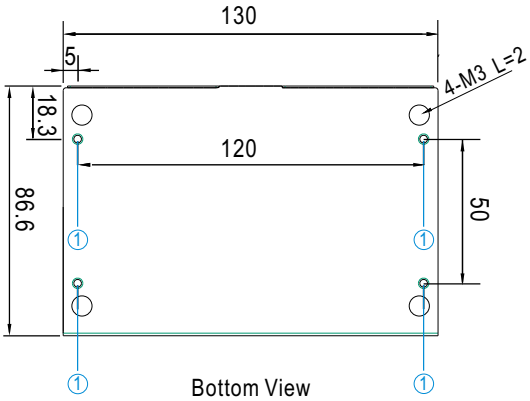

Bottom View

MeanWell Direct, Orion House, Calleva Park, Aldermaston, Berkshire, RG7 8SN
Tel: +44 (0)118 9703858 Email: sales@meanwelldirect.co.uk

RPS-400-SF (Enclosed type with fan on the side)

Case No. 248A Unit:mm

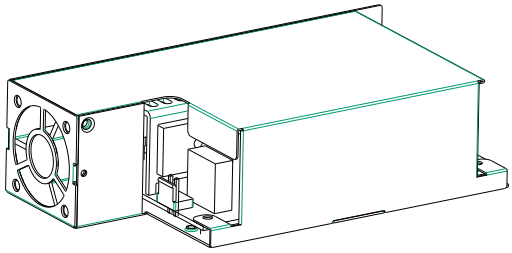

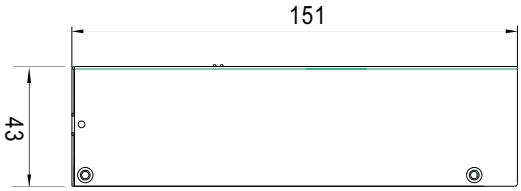

Side View

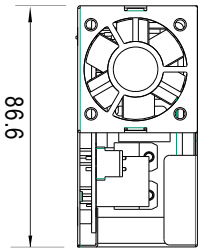

Side View

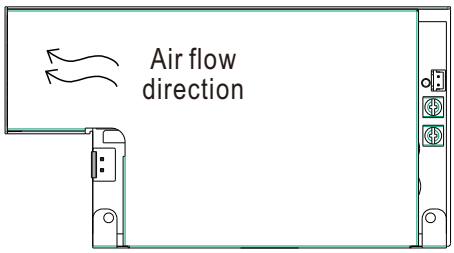

Top View

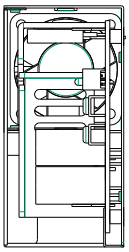

Side View

Side View

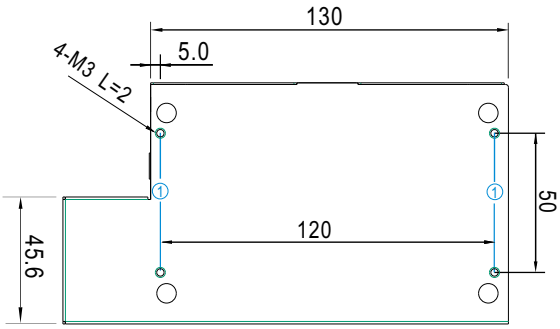

Bottom View

MeanWell Direct, Orion House, Calleva Park, Aldermaston, Berkshire, RG7 8SN
Tel: +44 (0)118 9703858 Email: sales@meanwelldirect.co.uk

※ Mounting Instruction for -C/-TF/-SF Type

Hole No.	Recommended Screw Size	MAX. Penetration Depth L	Recommended mounting torque
①	M3	2mm	4~6Kgf-cm
②	M3	4mm	4~6Kgf-cm

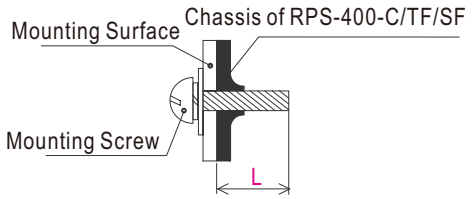

※ CONNECTION

AC Input Connector (CN1) : JST B3P-VH or equivalent

Pin No.	Assignment	Mating Housing	Terminal
1	AC/N	JST VHR or equivalent	JST SVH-21T-P1.1 or equivalent
2	No Pin		
3	AC/L		

DC Output Connector (CN2,CN3)

Pin No.	Assignment	Output Terminals
CN2	-V	M4 Pan HD screw in 2 positions Torque to 8 lbs-in(90cNm)max.
CN3	+V	

⚠ HS1,HS2,HS3,HS4 can not be shorted

Function Connector(CN11): TKP DH2I-2X2 or equivalent

Pin No.	Assignment	Mating Housing	Terminal
1	-S	TKP DH2 or equivalent	TKP or equivalent
2	+S		
3	DC COM		
4	PG		

Function Connector(CN95): TKP DH2L-2X2 or equivalent

Pin No.	Assignment	Mating Housing	Terminal
1	5Vsb	TKP DH2 or equivalent	TKP or equivalent
2,4	DC COM		
3	PS-ON		

FAN Connector(CN12) : TKP 8812-2 or equivalent
(Except for RPS-400-TF/SF)

Pin No.	Assignment	Mating Housing	Terminal
1	DC COM	TKP 2502 or equivalent	TKP 8811 or equivalent
2	+12V		

※ Note: 1. When the input voltage is 230VAC, the PCB type (Blank-Type) model delivers EMI Class B for both conducted emission and radiated emission for the power supply, When the input voltage is 110VAC, the PCB type (Blank Type) model delivers EMI Class B for conducted emission and Class A for radiated emission for the power supply. It delivers Class A for conduted emission and radiated emission, when configured into Class II (without FG) system.

2. The enclosed type (-C/TF/SF type) models are not suitable for configuration within a Class II (without FG) system, but suggested within a Class I (with FG) system.

3. Mounting Instruction for enclosed type.

■ Installation Manual

Please refer to : http://www.meanwell.com/manual.html

MeanWell Direct, Orion House, Calleva Park, Aldermaston, Berkshire, RG7 8SN
Tel: +44 (0)118 9703858 Email: sales@meanwelldirect.co.uk