100W Single Output with PFC Function

SP-100 series

■ Features :

- Universal AC input / full range
- Built-in active PFC function, PF>0.93
- Protections: Short circuit / Overload / Over voltage
- Built-in constant current limiting circuit
- Remote ON-OFF control(Optional)
- LED indicator for power on
- 100% full load burn-in test
- Fixed switching frequency at PFC:67KHz PWM:134KHz
- 3 years warranty

SPECIFICATION

MODEL		SP-100-3.3	SP-100-5	SP-100-7.5	SP-100-12	SP-100-13.5	SP-100-15	SP-100-24	SP-100-27	SP-100-48
OUTPUT	DC VOLTAGE	3.3V	5V	7.5V	12V	13.5V	15V	24V	27V	48V
	RATED CURRENT	20A	20A	13.5A	8.5A	7.5A	6.7A	4.2A	3.8A	2.1A
	CURRENT RANGE	0 ~ 20A	0 ~ 20A	0 ~ 13.5A	0 ~ 8.5A	0 ~ 7.5A	0 ~ 6.7A	0 ~ 4.2A	0 ~ 3.8A	0 ~ 2.1A
	RATED POWER	66W	100W	101.25W	102W	101.25W	100.5W	100.8W	102.6W	100.8W
	RIPPLE & NOISE (max.) Note.2	100mVp-p	100mVp-p	100mVp-p	100mVp-p	100mVp-p	100mVp-p	150mVp-p	150mVp-p	250mVp-p
	VOLTAGE ADJ. RANGE	3.14 ~ 3.63V	4.75 ~ 5.5V	7.13 ~ 8.25V	11.4 ~ 13.2V	12.8 ~ 14.9V	14.3 ~ 16.5V	22.8 ~ 26.4V	25.7 ~ 29.7V	45.6 ~ 52.8V
	VOLTAGE TOLERANCE Note.3	±2.0%	±2.0%	±2.0%	±2.0%	±2.0%	±2.0%	±1.0%	±1.0%	±1.0%
	LINE REGULATION	±0.5%	±0.5%	±0.5%	±0.5%	±0.5%	±0.5%	±0.5%	±0.5%	±0.5%
	LOAD REGULATION	±1.0%	±1.0%	±1.0%	±0.5%	±0.5%	±0.5%	±0.5%	±0.5%	±0.5%
	SETUP, RISE TIME	600ms, 30ms at full load								
	HOLD UP TIME (Typ.)	20ms at full load								
INPUT	VOLTAGE RANGE	85 ~ 264VAC 120 ~ 370VDC								
	FREQUENCY RANGE	47 ~ 63Hz								
	POWER FACTOR (Typ.)	PF>0.93/230VAC PF>0.97/115VAC at full load								
	EFFICIENCY (Typ.)	75%	79%	82%	82.5%	83%	84%	87%	86%	84%
	AC CURRENT (Typ.)	1.7A/115VAC 0.8A/230VAC								
	INRUSH CURRENT (Typ.)	COLD START 35A/230VAC								
	LEAKAGE CURRENT	<2mA / 240VAC								
PROTECTION	OVERLOAD	105 ~ 150% rated output power								
		Protection type : Constant current limiting, recovers automatically after fault condition is removed								
	OVER VOLTAGE	3.63 ~ 4.46V	5.5 ~ 6.75V	8.25 ~ 10.13V	13.2 ~ 16.2V	14.85 ~ 18.23V	16.5 ~ 20.25V	26.4 ~ 32.4V	29.7 ~ 36.45V	52.8 ~ 64.8V
		Protection type : Shut down o/p voltage, re-power on to recover								
FUNCTION	REMOTE CONTROL(OPTION)	CN1:4 ~ 10VDC POWER ON, <0 ~ 0.8VDC POWER OFF								
ENVIRONMENT	WORKING TEMP.	-10 ~ +60℃ (Refer to output load derating curve)								
	WORKING HUMIDITY	20 ~ 90% RH non-condensing								
	STORAGE TEMP., HUMIDITY	-20 ~ +85℃, 10 ~ 95% RH								
	TEMP. COEFFICIENT	±0.05%/℃ (0 ~ 50℃)								
	VIBRATION	10 ~ 500Hz, 2G 10min./1cycle, 60min. each along X, Y, Z axes								
SAFETY & EMC (Note 4)	SAFETY STANDARDS	UL60950-1, TUV EN60950-1 approved								
	WITHSTAND VOLTAGE	I/P-O/P:3KVAC I/P-FG:2KVAC O/P-FG:0.5KVAC								
	ISOLATION RESISTANCE	I/P-O/P, I/P-FG, O/P-FG:100M Ohms / 500VDC / 25℃/70% RH								
	EMC EMISSION	Compliance to EN55022 (CISPR22) Class B,EN61000-3-2,-3								
	EMC IMMUNITY	Compliance to EN61000-4-2,3,4,5,6,8,11; ENV50204, EN55024, light industry level, criteria A								
OTHERS	MTBF	211.3K hrs min. MIL-HDBK-217F (25℃)								
	DIMENSION	179*99*45mm (L*W*H)								
	PACKING	0.66Kg; 20pcs/14.3Kg/1.17CUFT								
NOTE	1. All parameters NOT specially mentioned are measured at 230VAC input, rated load and 25℃ of ambient temperature. 2. Ripple & noise are measured at 20MHz of bandwidth by using a 12" twisted pair-wire terminated with a 0.1uf & 47uf parallel capacitor. 3. Tolerance : includes set up tolerance, line regulation and load regulation. 4. The power supply is considered a component which will be installed into a final equipment. The final equipment must be re-confirmed that it still meets EMC directives. For guidance on how to perform these EMC tests, please refer to "EMI testing of component power supplies." (as available on http://www.meanwell.com)									

■ Mechanical Specification

Case No. 915A Unit:mm

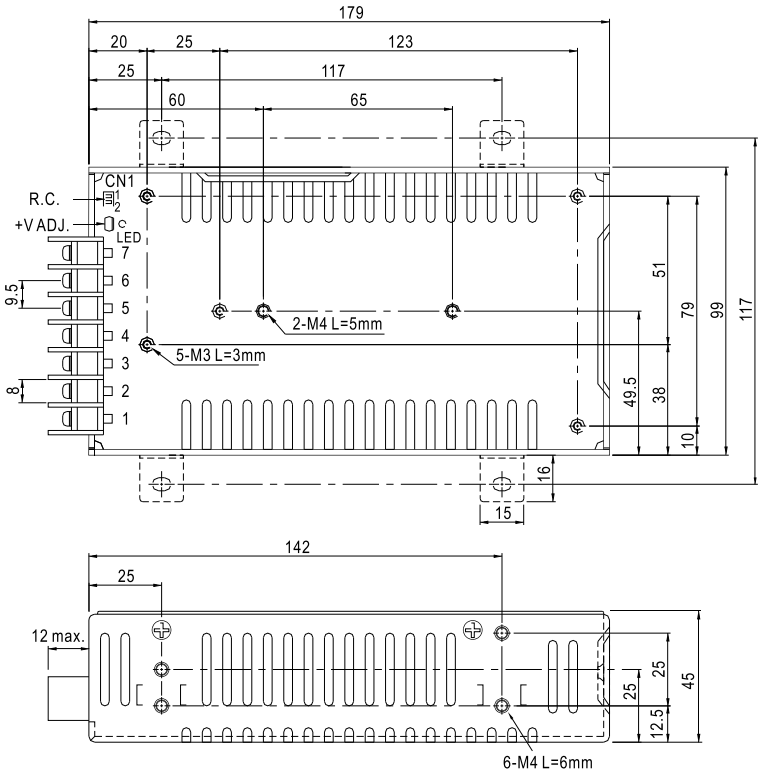

Terminal Pin No. Assignment

Pin No.	Assignment	Pin No.	Assignment
1	AC/L	4,5	DC OUTPUT -V
2	AC/N	6,7	DC OUTPUT +V
3	FG ⏚		

Remote ON/OFF(CN1): JST S2B-XH or equivalent(optional)

Pin No.	Assignment	Mating Housing	Terminal
1	RC+	JST XHP or equivalent	JST SXH-001T-P0.6 or equivalent
2	RC-		

■ Block Diagram

PFC fosc : 67KHz
PWM fosc : 134KHz

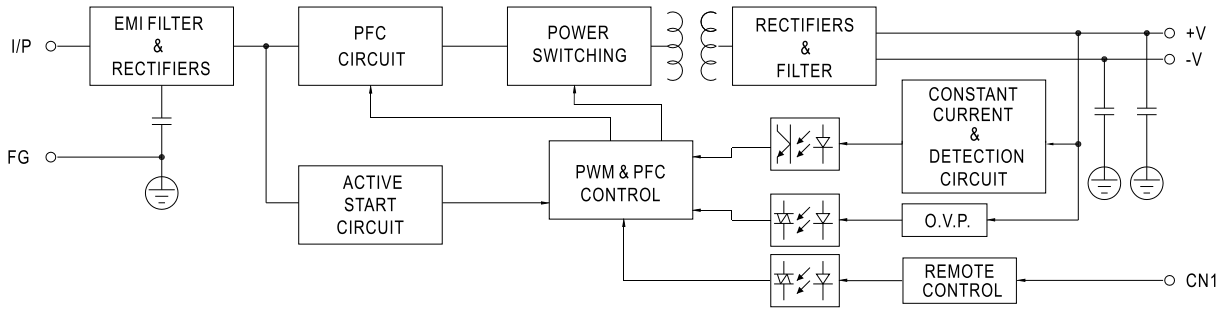

■ Derating Curve

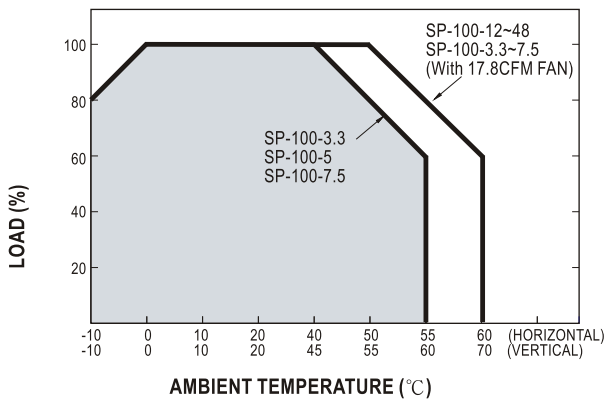
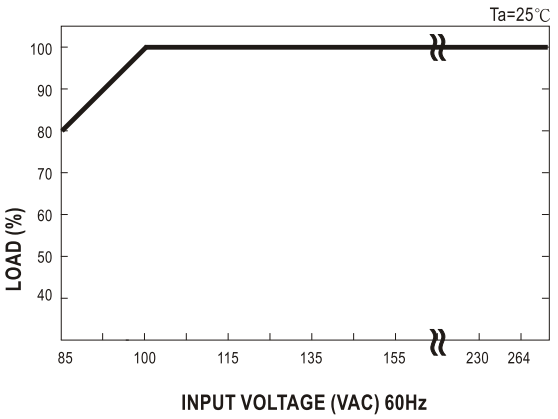
■ Output Derating VS Input Voltage