240W Output Switching Power Supply

HBG-240 series

■ Features :

- MEAN WELL patented housing design (Patent No.: CN201220314551)
- Universal AC input / Full range (up to 305VAC)
- Built-in active PFC function
- Protections: Short circuit / Over current / Over voltage / Over temperature
- OCP point adjustable through output cable or internal potentiometer
- IP67/IP65 design for indoor or outdoor installations
- Suitable for dry / damp / wet locations
- 5 years warranty, Tc70℃ 50000hrs

SELV IP65 IP67

HBG-240-60 A Blank : IP67 rated. Cable for I/O connection.
A : IP65 rated. Output constant current level can be adjusted through internal potentiometer.
B : IP67 rated. output constant current lever can be adjusted through output cable with 1-10V,PWM signal and Resistance

SPECIFICATION

MODEL		HBG-240-24	HBG-240-36	HBG-240-48	HBG-240-60
OUTPUT	DC VOLTAGE	24V	36V	48V	60V
	CONSTANT CURRENT REGION Note.4	14.4 ~ 24V	21.6 ~ 36V	28.8 ~ 48V	36 ~ 60V
	RATED CURRENT	10A	6.7A	5A	4.0A
	RATED POWER	240W	240W	240W	240W
	RIPPLE & NOISE (max.) Note.2	150mVp-p	250mVp-p	250mVp-p	350mVp-p
	CURRENT ADJ. RANGE	Can be adjusted by internal potentiometer A type only			
		6 ~ 10A	4.0 ~ 6.7A	3 ~ 5A	2.4 ~ 4.0A
	VOLTAGE TOLERANCE Note.3	±2.0%			
	LINE REGULATION	±0.5%			
	LOAD REGULATION Note.3	±0.5%			
	SETUP, RISE TIME Note.7	500ms,120ms /230VAC 2500ms,120ms /115VAC at full load			
	HOLD UP TIME (Typ.)	15ms at full load 230VAC /115VAC			
INPUT	VOLTAGE RANGE Note.5	90 ~ 305VAC 127 ~ 431VDC			
	FREQUENCY RANGE	47 ~ 63Hz			
	POWER FACTOR (Typ.)	PF>0.98/115VAC, PF>0.95/230VAC, PF>0.93/277VAC at full load (Please refer to "Power Factor Characteristic" curve)			
	TOTAL HARMONIC DISTORTION	THD< 20% when output loading≧60% at 115VAC/230VAC input and output loading≧80% at 277VAC input			
	EFFICIENCY (Typ.)	92.5%	92.5%	93%	93.5%
	AC CURRENT (Typ.)	2.5A / 115VAC 1.3A / 230VAC 1.2A / 277VAC			
	INRUSH CURRENT (Typ.)	COLD START 75A(twidth=680μs measured at 50% Ipeak) at 230VAC			
	MAX. No. of PSUs on 16A CIRCUIT BREAKER	2 units (circuit breaker of type B) / 3 units (circuit breaker of type C) at 230VAC			
	LEAKAGE CURRENT	<0.75mA / 277VAC			
PROTECTION	OVER CURRENT Note.4	95 ~ 108%			
		Protection type : Constant current limiting, recovers automatically after fault condition is removed			
	SHORT CIRCUIT	Hiccup mode, recovers automatically after fault condition is removed.			
	OVER VOLTAGE	27 ~ 34V	43 ~ 52V	52 ~ 63V	62 ~ 85V
		Protection type : Shut down and latch off o/p voltage, re-power on to recover			
	OVER TEMPERATURE	Shut down o/p voltage, recovers automatically after temperature goes down			
ENVIRONMENT	WORKING TEMP.	-40 ~ +60℃ (Refer to "Derating Curve")			
	WORKING HUMIDITY	20 ~ 95% RH non-condensing			
	STORAGE TEMP., HUMIDITY	-40 ~ +80℃, 10 ~ 95% RH			
	TEMP. COEFFICIENT	±0.03%/℃ (0 ~ 50℃)			
	VIBRATION	10 ~ 500Hz, 5G 12min./1cycle, period for 72min. each along X, Y, Z axes			
SAFETY & EMC	SAFETY STANDARDS	UL8750,CSA C22.2 No.250.13-12, ENEC EN61347-1,EN61347-2-13,EN62384 approved			
	WITHSTAND VOLTAGE	I/P-O/P:3.75KVAC I/P-FG:2.0KVAC O/P-FG:0.5KVAC			
	ISOLATION RESISTANCE	I/P-O/P, I/P-FG, O/P-FG:100M Ohms / 500VDC / 25℃/ 70% RH			
	EMC EMISSION	Compliance to EN55015, EN55022 (CISPR22) Class B, EN61000-3-2 Class C (≧75% load) ; EN61000-3-3			
	EMC IMMUNITY	Compliance to EN61000-4-2,3,4,5,6,8,11, EN61547, light industry level (surge 4KV), criteria A			
OTHERS	MTBF	190.7Khrs min. MIL-HDBK-217F (25℃)			
	DIMENSION	Refer to mechanical specification			
	PACKING	2.1Kg; 8pcs/18.3Kg/2.09CUFT			

NOTE

1. All parameters NOT specially mentioned are measured at 230VAC input, rated load and 25℃ of ambient temperature.
2. Ripple & noise are measured at 20MHz of bandwidth by using a 12" twisted pair-wire terminated with a 0.1uf & 47uf parallel capacitor.
3. Tolerance : includes set up tolerance, line regulation and load regulation.
4. Constant current operation region is within 60% ~100% rated output voltage. This is the suitable operation region for LED related applications, but please reconfirm special electrical requirements for some specific system design.
5. Derating may be needed under low input voltages. Please check the static characteristics for more details.
6. The power supply is considered as a component that will be operated in combination with final equipment. Since EMC performance will be affected by the complete installation, the final equipment manufacturers must re-qualify EMC Directive on the complete installation again.
7. Length of set up time is measured at first cold start. Turning ON/OFF the power supply may lead to increase of the set up time.
8. To fulfill requirements of the latest ErP regulation for lighting fixtures, this LED power supply can only be used behind a switch without permanently connected to the mains.

■ Mechanical Specification

Case No. 213 Unit:mm

Blank:(HBG-240)

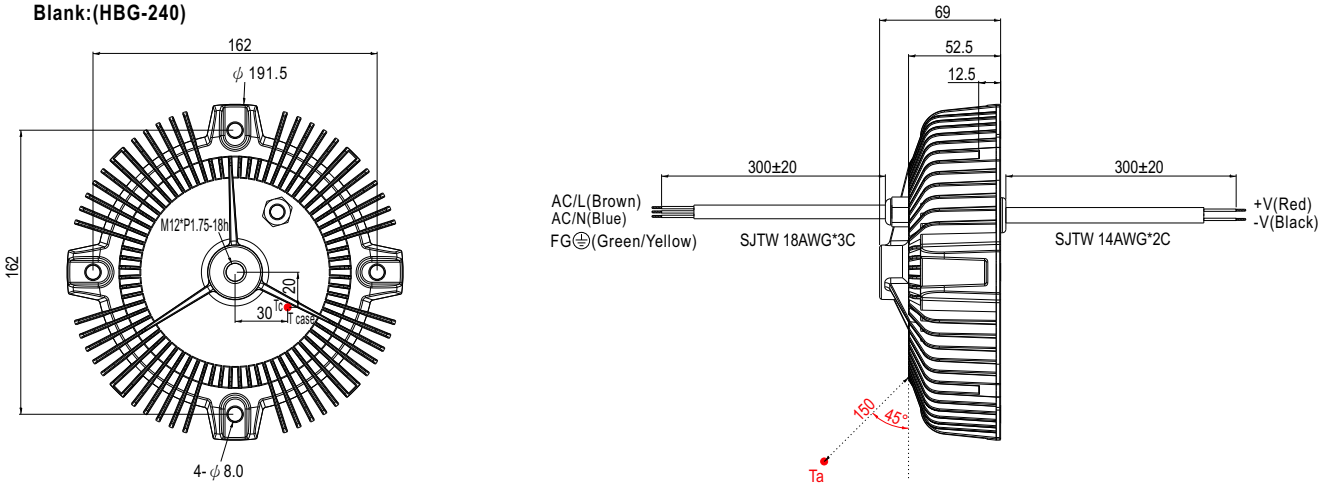

※ T case: Max. Case Temperature.(case temperature measured point)
※ Ta: Ambient Temperature measured point
※ IP67 rated. Cable for I/O connection.

A type:(HBG-240-_A)

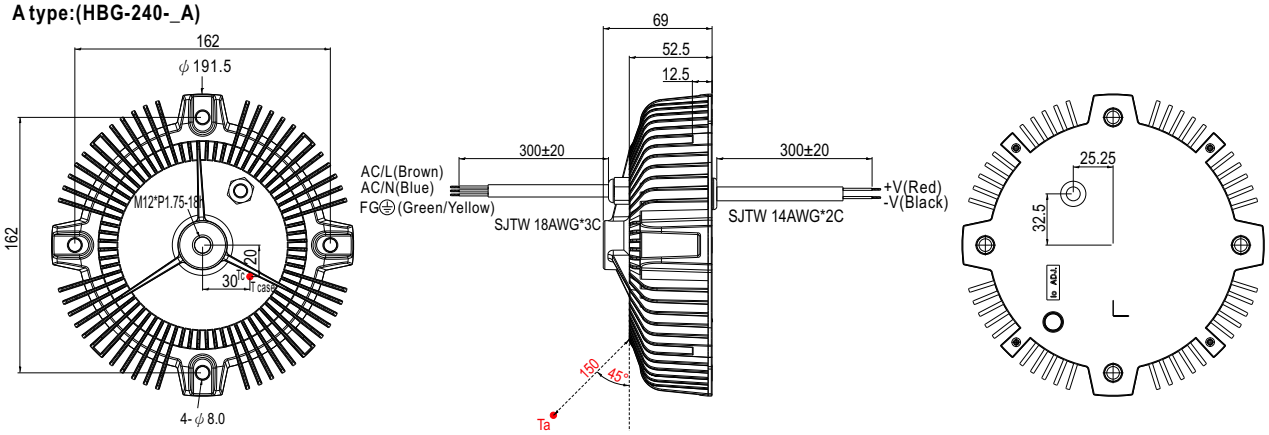

※ T case: Max. Case Temperature.(case temperature measured point)
※ Ta: Ambient Temperature measured point
※ IP65 rated. Output constant current level can be adjusted through internal potentiometer.

B type:(HBG-240-_B)

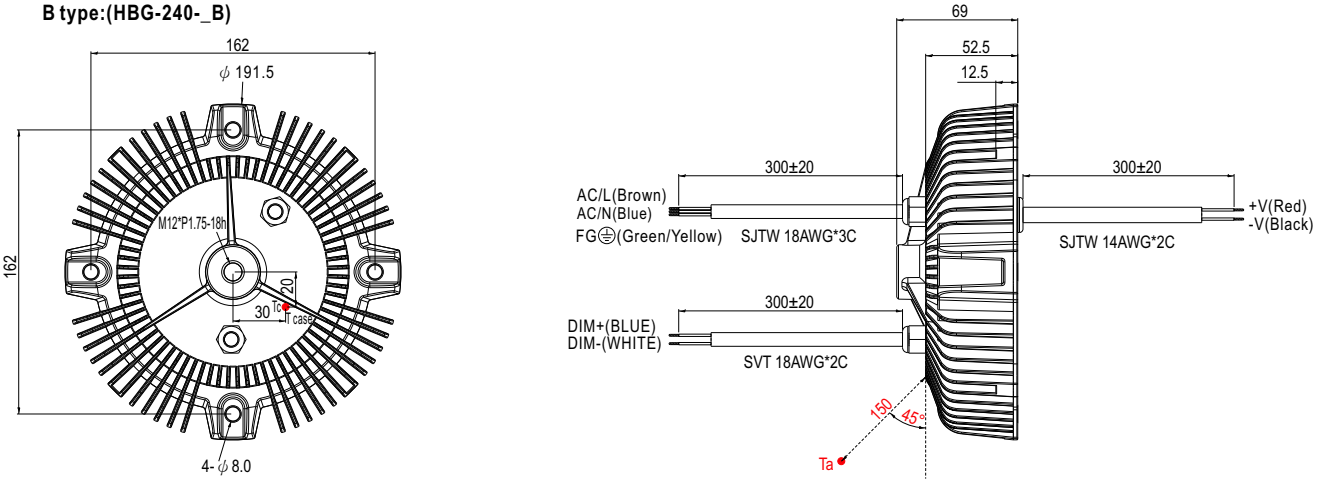

※ T case: Max. Case Temperature.(case temperature measured point)
※ Ta: Ambient Temperature measured point
※ IP67 rated. output constant current lever can be adjusted through output cable with 1-10V,PWM signal and Resistance

MeanWell Direct, Orion House, Calleva Park, Aldermaston, Berkshire, RG7 8SN
Tel: +44 (0)118 9703858 Email: sales@meanwelldirect.co.uk

■ DIMMING OPERATION

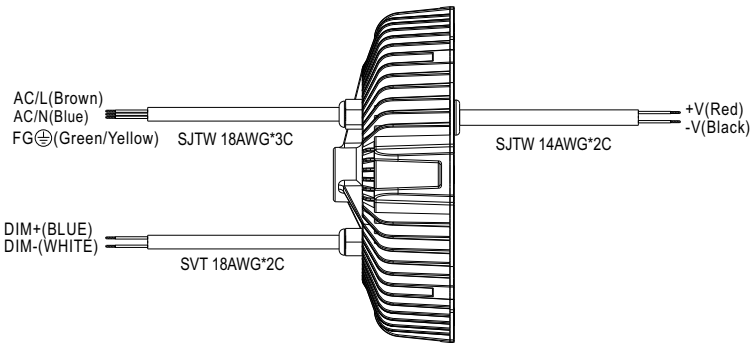

※ Built-in 3 in 1 dimming function, IP67 rated. Output constant current level can be adjusted through output cable by connecting a resistance or 1 ~ 10Vdc or 10V PWM signal between DIM+ and DIM-.

※ Please DO NOT connect "DIM-" to "-V".

※ Reference resistance value for output current adjustment (Typical)

Resistance value	Single driver	10KΩ	20KΩ	30KΩ	40KΩ	50KΩ	60KΩ	70KΩ	80KΩ	90KΩ	100KΩ	OPEN
	Multiple drivers (N=driver quantity for synchronized dimming operation)	10KΩ/N	20KΩ/N	30KΩ/N	40KΩ/N	50KΩ/N	60KΩ/N	70KΩ/N	80KΩ/N	90KΩ/N	100KΩ/N	-----
Percentage of rated current		10%	20%	30%	40%	50%	60%	70%	80%	90%	100%	95%~108%

※ 1 ~ 10V dimming function for output current adjustment (Typical)

Dimming value	1V	2V	3V	4V	5V	6V	7V	8V	9V	10V	OPEN
Percentage of rated current	10%	20%	30%	40%	50%	60%	70%	80%	90%	100%	95%~108%

※ 10V PWM signal for output current adjustment (Typical): Frequency range :100Hz ~ 3KHz

Duty value	10%	20%	30%	40%	50%	60%	70%	80%	90%	100%	OPEN
Percentage of rated current	10%	20%	30%	40%	50%	60%	70%	80%	90%	100%	95%~108%

※Using the built-in dimming function on B-type model can't turn the lighting fixture totally dark. Please refer to the connection method below to achieve 0% brightness of the lighting fixture connecting to the LED power supply unit.

※Direct connecting to LEDs is suggested, but is not suitable for using additional drivers.

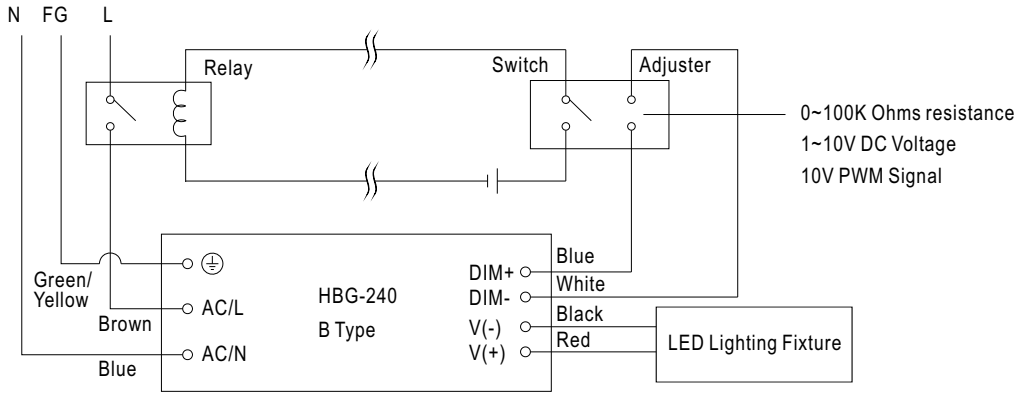

Using a switch and relay can turn ON/OFF the lighting fixture.

1.Output constant current level can be adjusted through output cable by connecting a resistance or 1~10Vdc or 10V PWM signal between DIM+ and DIM-.

2.The LED lighting fixture can be turned ON/OFF by the switch.

MeanWell Direct, Orion House, Calleva Park, Aldermaston, Berkshire, RG7 8SN
Tel: +44 (0)118 9703858 Email: sales@meanwelldirect.co.uk

■ Block Diagram

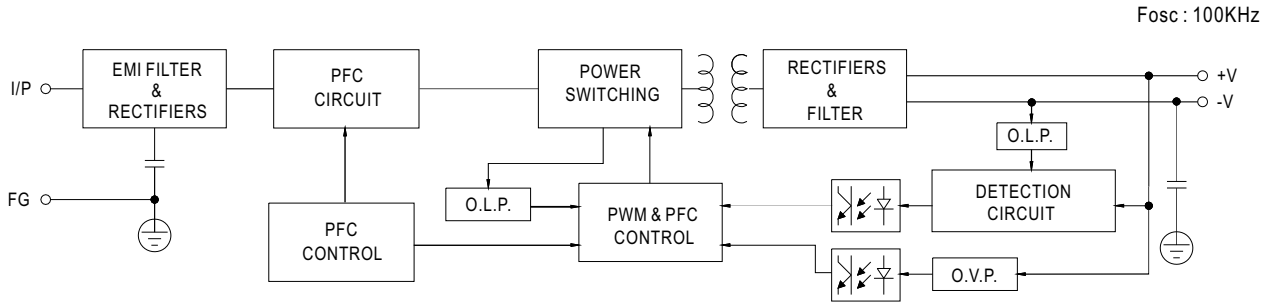

■ Derating Curve

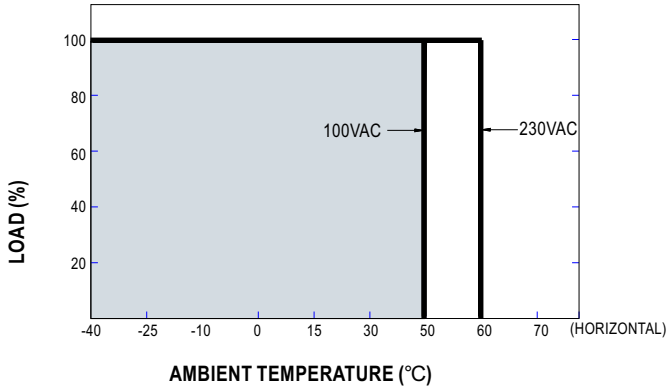

■ Static Characteristics

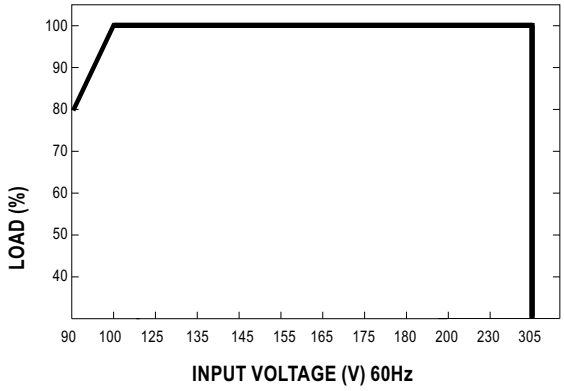

MeanWell Direct, Orion House, Calleva Park, Aldermaston, Berkshire, RG7 8SN
Tel: +44 (0)118 9703858 Email: sales@meanwelldirect.co.uk

■ Power Factor Characteristic

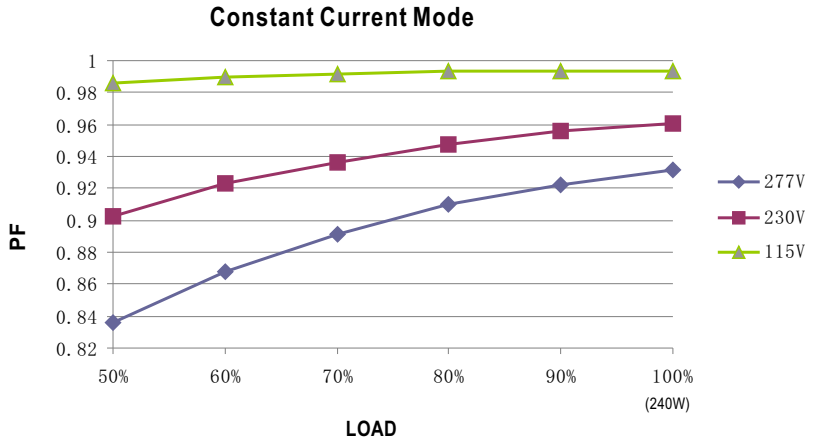

■ EFFICIENCY vs LOAD (48V Model)

HBG-240 series possess superior working efficiency that up to 93% can be reached in field applications.

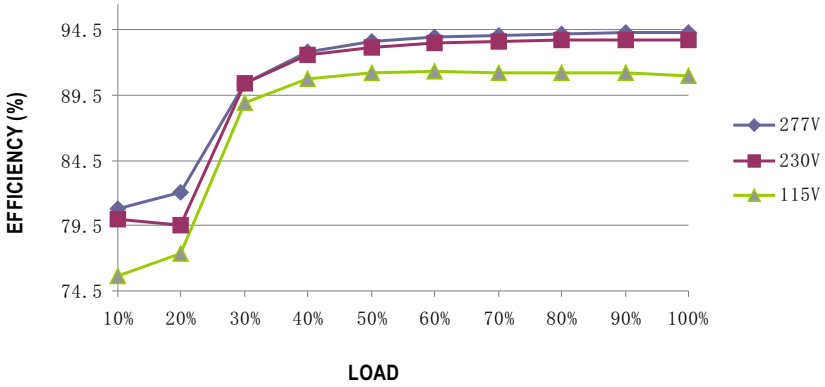

■ DRIVING METHODS OF LED MODULE

There are two major kinds of LED drive method "direct drive" and "with LED driver".
A typical LED power supply may either work in "constant voltage mode (CV) or constant current mode (CC)" to drive the LEDs.
Mean Well's LED power supply with CV+ CC characteristic can be operated at both CV mode (with LED driver, at area (A) and CC mode (direct drive, at area (B).

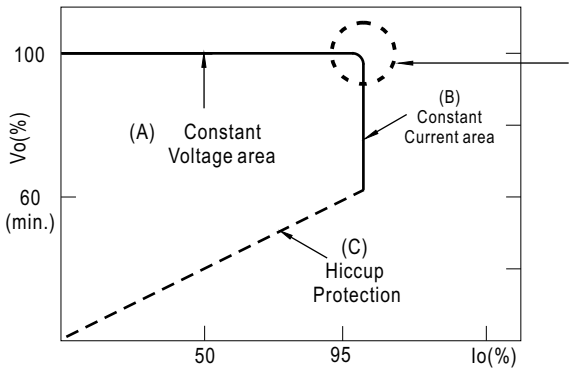

In the constant current region, the highest voltage at the output of the driver depends on the configuration of the end systems.
Should there be any compatibility issues, please contact MEAN WELL.

Typical LED power supply I-V curve

■ INSTALLATIONS

Hanger	**Chain**	**High Bay Light**

Caution

Please inspect the appearance of the product for completeness if the package is damaged. There should not be any cracks.

Please do not drop or bump the product.

All screws including the suspension screw should be paired with a spring washer and locked tight.

The entire luminaire, including the power supply should be limited to less than 15Kg.

The luminaire should be cautiously protected throughout packaging and transportation to avoid damage due to shock.

Please thoroughly perform the cautionary notes above to prevent the possibility of the luminaire falling and injuring personnel.