85 ~ 100W Ultra Slim Step Shape DIN Rail

HDR-100 series

LPS (Blank type only) | UL508 | UL60950-1 | EN61558 | IEC60950-1 | R33100 RoHS | ECO | Household | Automate | Industrial | Security | Network | Telecom

Features

- Ultra slim design with 70mm(4SU) width
- Universal input 85~264VAC(277VAC operational)
- No load power consumption<0.3W
- Isolation class II
- Pass LPS (Limited power source) for Blank type
- DC output voltage adjustable
- Protections : Short circuit / Overload / Over voltage
- Cooling by free air convection (working temperature:-30~+70°C)
- DIN rail TS-35/7.5 or 15 mountable
- Over voltage category III
- LED indicator for power on
- 3 years warranty

Applications

- Household control system
- Building automation
- Industrial control system
- Factory automation
- Electro-mechanical apparatus

Description

HDR-100 is one economical ultra slim 100W DIN rail power supply series, adapt to be installed on TS-35/7.5 or TS-35/15 mounting rails. The body is designed 70mm(4SU) in width, which allows space saving inside the cabinets. The entire series adopts the full range AC input from 85VAC to 264VAC(277VAC operational) and conforms to EN61000-3-2, the norm the European Union regulates for harmonic current. HDR-100 is designed with plastic housing that it can effectively prevent user from electric hazards. With working efficiency up to 90%, the entire series can operate at the ambient temperature between -30℃ and 70℃ under air convection. It is equipped with constant current mode for over-load protection, fitting various inductive or capacitive applications. The complete protection functions and relevant certificates for home automations and industrial control apparatus (IEC60950-1,UL508, UL60950-1, EN61558-2-16) make HDR-100 a very competitive power supply solution for household and industrial applications.

Model Encoding

HDR - 100 - 12 N

- N — Performance difference
- 12 — Output voltage
- 100 — Rated wattage
- HDR — Series name

Type	Description	Note
Blank	92W max, Pass LPS with a narrower output adjustable range	In stock
N	100W max, Non-LPS with a wider output adjustable range	In stock

85 ~ 100W Ultra Slim Step Shape DIN Rail

HDR-100 series

SPECIFICATION

MODEL		HDR-100-12	HDR-100-12N	HDR-100-15	HDR-100-15N	HDR-100-24	HDR-100-24N	HDR-100-48	HDR-100-48N
OUTPUT	DC VOLTAGE	12V		15V		24V		48V	
	RATED CURRENT	7.1A	7.5A	6.13A	6.5A	3.83A	4.2A	1.92A	2.1A
	CURRENT RANGE	0 ~ 7.1A	0 ~ 7.5A	0 ~ 6.13A	0 ~ 6.5A	0 ~ 3.83A	0 ~ 4.2A	0 ~1.92A	0 ~ 2.1A
	RATED POWER	85.2W	90W	92W	97.5W	92W	100.8W	92.2W	100.8W
	RIPPLE & NOISE (max.) Note.2	120mVp-p		120mVp-p		150mVp-p		240mVp-p	
	VOLTAGE ADJ. RANGE — Pass LPS	12 ~ 13V		15 ~ 17V		24 ~ 25.5V		48 ~ 48.7V	
	VOLTAGE ADJ. RANGE — Non LPS	12~ 13.8V		13.5 ~ 18V		21.6 ~ 29V		43.2 ~ 55.2V	
	VOLTAGE TOLERANCE Note.3	±2.0%		±1.0%		±1.0%		±1.0%	
	LINE REGULATION	±1.0%		±1.0%		±1.0%		±1.0%	
	LOAD REGULATION	±1.0%		±1.0%		±1.0%		±1.0%	
	SETUP, RISE TIME	500ms, 60ms/230VAC 500ms, 60ms/115VAC at full load							
	HOLD UP TIME (Typ.)	30ms/230VAC 12ms/115VAC at full load							
INPUT	VOLTAGE RANGE	85 ~ 264VAC (277VAC operational) 120 ~ 370VDC (390VDC operational)							
	FREQUENCY RANGE	47 ~ 63Hz							
	EFFICIENCY (Typ.)	88%		89%		90%		90%	
	AC CURRENT (Typ.)	3A/115VAC 1.6A/230VAC							
	INRUSH CURRENT (Typ.)	COLD START 35A/115VAC 70A/230VAC							
PROTECTION	OVERLOAD Note.4	HDR-100 : 102 ~ 110% rated output power ; HDR-100-xxN : 105 ~ 150% rated output power							
		Protection type : Constant current limiting, recovers automatically after fault condition is removed							
	OVER VOLTAGE	14.2 ~ 16.2V		18.8 ~ 22.5V		30 ~ 36V		56.5 ~ 64.8V	
		Protection type : Shut down o/p voltage, re-power on to recover							
ENVIRONMENT	WORKING TEMP.	-30 ~ +70℃ (Refer to "Derating Curve")							
	WORKING HUMIDITY	20 ~ 90% RH non-condensing							
	STORAGE TEMP., HUMIDITY	-40 ~ +85℃, 10 ~ 95% RH non-condensing							
	TEMP. COEFFICIENT	±0.03%/℃ (0 ~ 50℃) RH non-condensing							
	VIBRATION	10 ~ 500Hz, 2G 10min./1cycle, period for 60min. each along X, Y, Z axes; Mounting: Compliance to IEC60068-2-6							
	OPERATING ALTITUDE	2000 meters							
	OVER VOLTAGE CATEGORY	Ⅲ ; According to EN61558, EN50178,EN60664-1, EN62477-1 ; altitude up to 2000 meters							
SAFETY & EMC (Note 6)	SAFETY STANDARDS	UL60950-1, UL508, TUV EN61558-2-16, IEC60950-1, EAC TP TC 004, BSMI CNS14336-1 approved; Design refer to TUV EN60950-1							
	WITHSTAND VOLTAGE	I/P-O/P:4KVAC							
	ISOLATION RESISTANCE	I/P-O/P:100M Ohms / 500VDC / 25℃/ 70% RH							
	EMC EMISSION	**Parameter**	**Standard**	**Test Level / Note**					
		Conducted	EN55032(CISPR32), CNS13438	Class B					
		Radiated	EN55032(CISPR32), CNS13438	Class B					
		Harmonic Current (Note 5)	EN61000-3-2	Class A					
		Voltage Flicker	EN61000-3-3	-------					
	EMC IMMUNITY	EN55024, EN61000-6-2, EN61204-3							
		Parameter	**Standard**	**Test Level /Note**					
		ESD	EN61000-4-2	Level 3, 8KV air; Level 2, 4KV contact, criteria A					
		Radiated Susceptibility	EN61000-4-3	Level 3, criteria A					
		EFT/Burest	EN61000-4-4	Level 3, criteria A					
		Surge	EN61000-4-5	Level 4,2KV/L-N, criteria A					
		Conducted	EN61000-4-6	Level 3, criteria A					
		Magnetic Field	EN61000-4-8	Level 4, criteria A					
		Voltage Dips and interruptions	EN61000-4-11	>95% dip 0. 5 periods, 30% dip 25 periods, >95% interruptions 250 periods					
OTHERS	MTBF	856.5K hrs min. MIL-HDBK-217F (25℃)							
	DIMENSION	70*90*54.5mm (W*H*D)							
	PACKING	0.27Kg; 48pcs/14Kg/1.10CUFT							

NOTE

1. All parameters NOT specially mentioned are measured at 230VAC input, rated load and 25℃ of ambient temperature.
2. Ripple & noise are measured at 20MHz of bandwidth by using a 12" twisted pair-wire terminated with a 0.1μf & 47μf parallel capacitor.
3. Tolerance : includes set up tolerance, line regulation and load regulation.
4. Constant current limiting operation within 50% ~100% rated output voltage; protection type for short ciruit is hiccup mode,it will recover automatically after fault condition is removed.
5. Harmonic current test at 90% load for HDR-100-xxN.
6. The power supply is considered as an independent unit, but the final equipment still need to re-confirm that the whole system complies with the EMC directives. For guidance on how to perform these EMC tests, please refer to "EMI testing of component power supplies." (as available on http://www.meanwell.com)
7. The ambient temperature derating of 3.5℃/1000m with fanless models and of 5℃/1000m with fan models for operating altitude higher than 2000m(6500ft).

Block Diagram

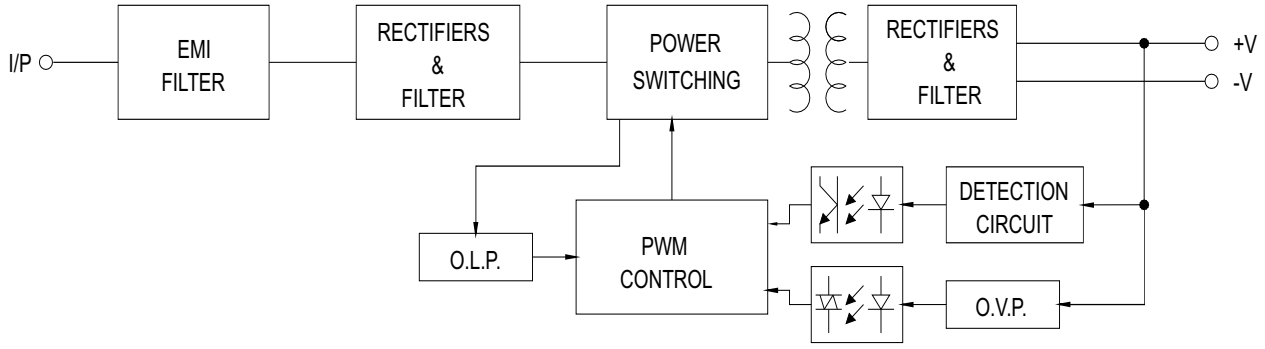

Derating Curve VS Ambient Temperature

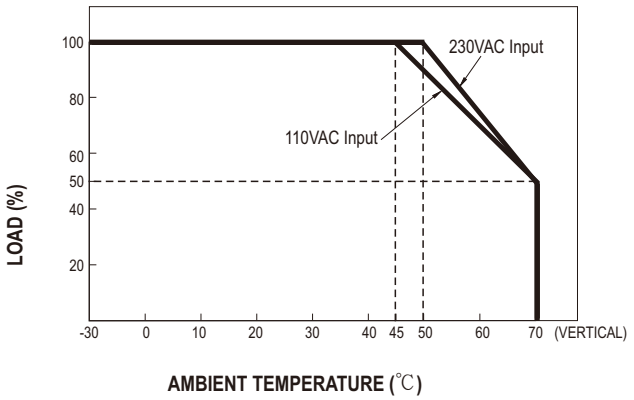

Output Derating VS Input Voltage

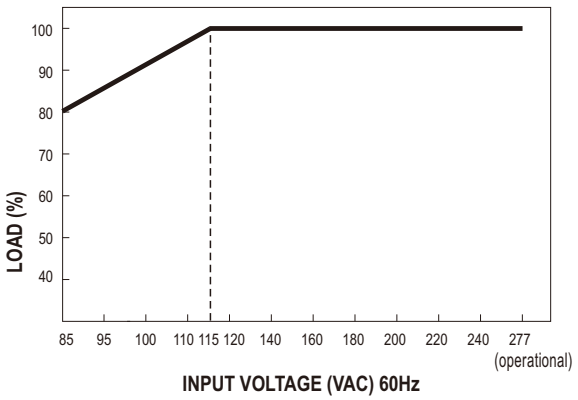

Mechanical Specification

(Unit: mm , tolerance ± 0.5mm)

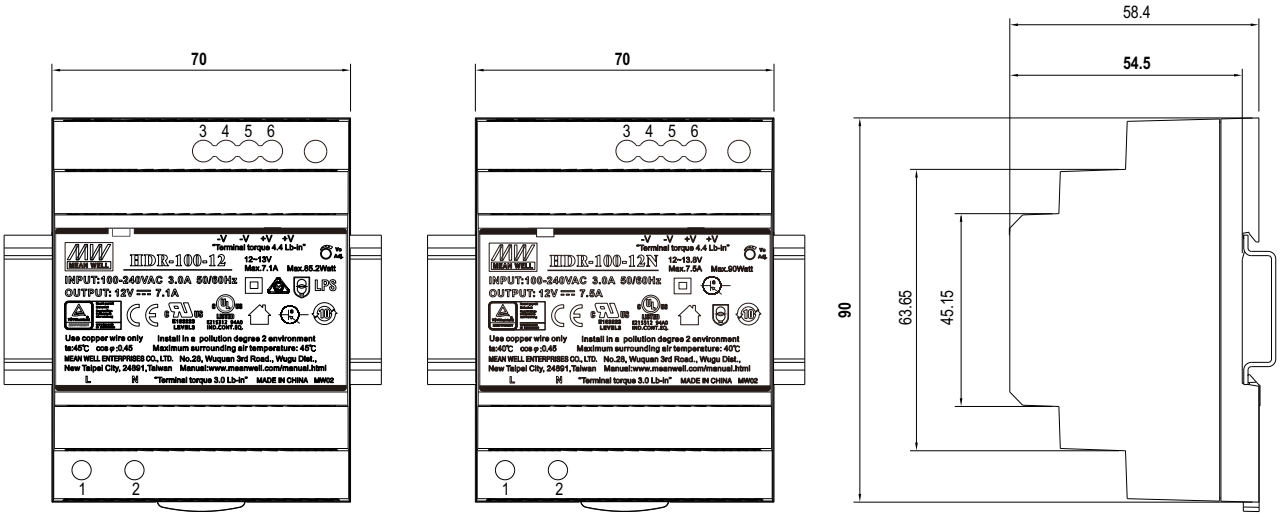

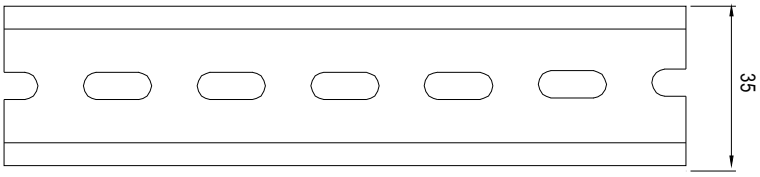

ADMISSIBLE DIN-RAIL:TS35/7.5 OR TS35/15

Terminal Pin No. Assignment

Pin No.	Assignment	Pin No.	Assignment
1	AC/L	3,4	-V
2	AC/N	5,6	+V

Installation Manual

Please refer to : http://www.meanwell.com/manual.html