80W Constant Voltage + Constant Current LED Driver

HLG-80H series

TAIWAN EXCELLENCE 2011

SELV IP65 IP67 Type HL (for HLG-80H-48/54 only) (except for BL type) Type HL (except for HLG-80H-48/54) (except for HLG-80H-48/54BL) (for HLG-80H-48/54BL only) (for HLG-80H-12~42BL only) (Optional) CB CE

Features

- Constant Voltage + Constant Current mode output
- Metal housing with class I design
- Built-in active PFC function
- Class 2 power unit
- IP67 / IP65 rating for indoor or outdoor installations
- Function options: output adjustable via potentiometer; 3 in 1 dimming; Timer dimming
- Typical lifetime > 62000 hours
- 7 years warranty

Applications

- LED street lighting
- LED high-bay lighting
- Parking space lighting
- LED fishing lamp
- LED greenhouse lighting
- Type "HL" for use in Class I , Division 2 hazardous (Classified) location.

Description

HLG-80H series is a 80W AC/DC LED driver featuring the dual mode constant voltage and constant current output. HLG-80H operates from 90~305VAC and offers models with different rated voltage rangingbetween 12V and 54V. Thanks to the high efficiency up to 91%, with the fanless design, the entire series is able to operate for -40℃ ~ +80℃ case temperature under free air convection. The design of metal housing and IP67/IP65 ingress protection level allows this series to fit both indoor and outdoor applications. HLG-80H is equipped with various function options, such as dimming methodologies, so as to provide the optimal design flexibility for LED lighting system.

Model Encoding

HLG - 80H - 15 A

- A — Function options
- 15 — Rated output voltage (12V/15V/20V/24V/30V/36V/42V/48V/54V)
- 80H — Rated wattage
- HLG — Series name

Type	IP Level	Function	Note
Blank	IP67	Io and Vo fixed	In Stock
A	IP65	Io and Vo adjustable through built-in potentiometer	In Stock
B	IP67	3 in 1 dimming function (1~10VDC, 10V PWM signal and resistance)	In Stock
BL	IP66	B-Type with junction box. UL8750 LISTED. Contact MEAN WELL for details	By request
D	IP67	Timer dimming function, contact MEAN WELL for details(safety pending).	By request

MeanWell Direct, Orion House, Calleva Park, Aldermaston, Berkshire, RG7 8SN
Tel: +44 (0)118 9703858 Email: sales@meanwelldirect.co.uk

SPECIFICATION

MODEL		HLG-80H-12□	HLG-80H-15□	HLG-80H-20□	HLG-80H-24□	HLG-80H-30□	HLG-80H-36□	HLG-80H-42□	HLG-80H-48□	HLG-80H-54□
OUTPUT	DC VOLTAGE	12V	15V	20V	24V	30V	36V	42V	48V	54V
	CONSTANT CURRENT REGION Note.4	7.2 ~12V	9 ~ 15V	12 ~ 20V	14.4 ~ 24V	18 ~ 30V	21.6 ~ 36V	25.2 ~ 42V	28.8 ~ 48V	32.4 ~ 54V
	RATED CURRENT	5A	5A	4A	3.4A	2.7A	2.3A	1.95A	1.7A	1.5A
	RATED POWER	60W	75W	80W	81.6W	81W	82.8W	81.9W	81.6W	81W
	RIPPLE & NOISE (max.) Note.2	150mVp-p	150mVp-p	150mVp-p	150mVp-p	200mVp-p	200mVp-p	200mVp-p	200mVp-p	200mVp-p
	VOLTAGE ADJ. RANGE	Adjustable for A-Type only (via built-in potentiometer)								
		10.8 ~ 13.5V	13.5 ~ 17V	17 ~ 22V	22 ~ 27V	27 ~ 33V	33 ~ 40V	38 ~ 46V	43 ~ 53V	49 ~ 58V
	CURRENT ADJ. RANGE	Adjustable for A-Type only (via built-in potentiometer)								
		3 ~ 5A	3 ~ 5A	2.4 ~ 4A	2.04 ~ 3.4A	1.62 ~ 2.7A	1.38 ~ 2.3A	1.17 ~ 1.95A	1.02 ~ 1.7A	0.9 ~ 1.5A
	VOLTAGE TOLERANCE Note.3	±2.5%	±2.0%	±1.0%	±1.0%	±1.0%	±1.0%	±1.0%	±1.0%	±1.0%
	LINE REGULATION	±0.5%	±0.5%	±0.5%	±0.5%	±0.5%	±0.5%	±0.5%	±0.5%	±0.5%
	LOAD REGULATION	±2.0%	±1.5%	±1.0%	±0.5%	±0.5%	±0.5%	±0.5%	±0.5%	±0.5%
	SETUP, RISE TIME Note.6	1200ms,200ms/115VAC 500ms,200ms/230VAC								
	HOLD UP TIME (Typ.)	16ms at full load 230VAC /115VAC								
INPUT	VOLTAGE RANGE Note.5	90 ~ 305VAC 127 ~ 431VDC (Please refer to "STATIC CHARACTERISTIC" section)								
	FREQUENCY RANGE	47 ~ 63Hz								
	POWER FACTOR (Typ.)	PF≧0.96/115VAC, PF≧0.96/230VAC, PF≧0.94/277VAC @ full load (Please refer to "POWER FACTOR (PF) CHARACTERISTIC" section)								
	TOTAL HARMONIC DISTORTION	THD< 20% (@ load≧60% / 115VAC,230VAC; @ load≧75% / 277VAC) (Please refer to "TOTAL HARMONIC DISTORTION (THD)" section)								
	EFFICIENCY (Typ.)	88%	89%	90%	90.5%	91%	91%	91%	91%	91%
	AC CURRENT (Typ.)	0.85A / 115VAC 0.425A / 230VAC 0.4A / 277VAC								
	INRUSH CURRENT (Typ.)	COLD START 70A(t_{width}=485μs measured at 50% I_{peak}) at 230VAC; Per NEMA 410								
	MAX. No. of PSUs on 16A CIRCUIT BREAKER	3 units (circuit breaker of type B) / 6 units (circuit breaker of type C) at 230VAC								
	LEAKAGE CURRENT	<0.75mA / 277VAC								
PROTECTION	OVER CURRENT	95 ~ 108%								
		Constant current limiting, recovers automatically after fault condition is removed								
	SHORT CIRCUIT	Hiccup mode, recovers automatically after fault condition is removed								
	OVER VOLTAGE	14 ~ 17V	18 ~ 24V	23 ~ 30V	28 ~ 35V	35 ~ 43V	41 ~ 49V	48 ~ 58V	54 ~ 63V	59 ~ 68V
		Shut down o/p voltage, re-power on to recover								
	OVER TEMPERATURE	Shut down o/p voltage, re-power on to recover								
ENVIRONMENT	WORKING TEMP.	Tcase= -40 ~ +80℃ (Please refer to "OUTPUT LOAD vs TEMPERATURE" section)								
	MAX. CASE TEMP.	Tcase= +80℃								
	WORKING HUMIDITY	20 ~ 95% RH non-condensing								
	STORAGE TEMP., HUMIDITY	-40 ~ +80℃, 10 ~ 95% RH								
	TEMP. COEFFICIENT	±0.03%/℃ (0 ~ 60℃)								
	VIBRATION	10 ~ 500Hz, 5G 12min./1cycle, period for 72min. each along X, Y, Z axes								
SAFETY & EMC	SAFETY STANDARDS Note.8	UL8750(type"HL"), CSA C22.2 No. 250.0-08(except for HLG-80H-48/54V & HLG-80H-48/54BL), UL8750 LISTED for HLG-80H-□BL; TUV EN61347-1, EN61347-2-13 independent, optional models for J61347-1, J61347-2-13, IP65 or IP67 approved ; Design refer to UL60950-1, TUV EN60950-1								
	WITHSTAND VOLTAGE	I/P-O/P:3.75KVAC I/P-FG:2KVAC O/P-FG:1.5KVAC								
	ISOLATION RESISTANCE	I/P-O/P, I/P-FG, O/P-FG:100M Ohms / 500VDC / 25℃/ 70% RH								
	EMC EMISSION Note.8	Compliance to En55015, EN61000-3-2 Class C (@ load≧60%) ; EN61000-3-3								
	EMC IMMUNITY	Compliance to EN61000-4-2,3,4,5,6,8,11, EN61547, light industry level (surge immunity Line-Earth 4KV, Line-Line 2KV)								
OTHERS	MTBF	357.8K hrs min. MIL-HDBK-217F (25℃)								
	DIMENSION	195.6*61.5*38.8mm (L*W*H)								
	PACKING	0.84Kg; 16pcs/14.4Kg/0.54CUFT								

NOTE

1. All parameters NOT specially mentioned are measured at 230VAC input, rated current and 25℃ of ambient temperature.
2. Ripple & noise are measured at 20MHz of bandwidth by using a 12" twisted pair-wire terminated with a 0.1uf & 47uf parallel capacitor.
3. Tolerance : includes set up tolerance, line regulation and load regulation.
4. Please refer to "DRIVING METHODS OF LED MODULE".
5. De-rating may be needed under low input voltages. Please refer to “STATIC CHARACTERISTIC” sections for details.
6. Length of set up time is measured at first cold start. Turning ON/OFF the driver may lead to increase of the set up time.
7. The driver is considered as a component that will be operated in combination with final equipment. Since EMC performance will be affected by the complete installation, the final equipment manufacturers must re-qualify EMC Directive on the complete installation again.
8. The model certified for CCC(GB19510.14, GB19510.1, GB17743 and GB17625.1) is an optional model . Please contact MEAN WELL for details.
9. To fulfill requirements of the latest ErP regulation for lighting fixtures, this LED driver can only be used behind a switch without permanently connected to the mains.
10. This series meets the typical life expectancy of >62,000 hours of operation when Tcase, particularly (tc) point (or TMP, per DLC), is about 75℃ or less.
11. Please refer to the warranty statement on MEAN WELL's website at http://www.meanwell.com

■ BLOCK DIAGRAM

Fosc : 100KHz

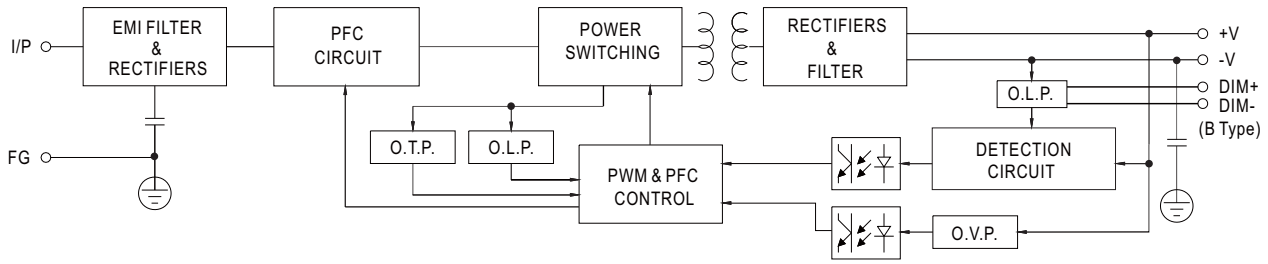

■ DRIVING METHODS OF LED MODULE

※ This series is able to work in either Constant Current mode (a direct drive way) or Constant Voltage mode (usually through additional DC/DC driver) to drive the LEDs.

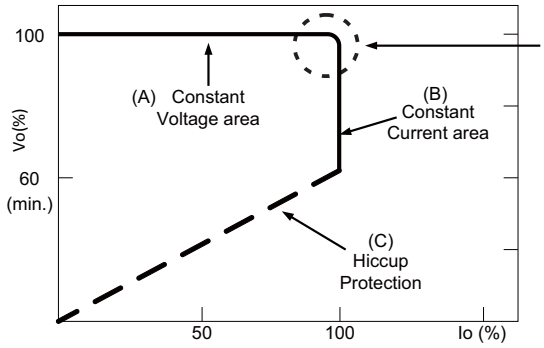

In the constant current region, the highest voltage at the output of the driver depends on the configuration of the end systems.

Should there be any compatibility issues, please contact MEAN WELL.

Typical output current normalized by rated current (%)

MeanWell Direct, Orion House, Calleva Park, Aldermaston, Berkshire, RG7 8SN
Tel: +44 (0)118 9703858 Email: sales@meanwelldirect.co.uk

■ DIMMING OPERATION

※ 3 in 1 dimming function (for B-Type)

- Output constant current level can be adjusted by applying one of the three methodologies between DIM+ and DIM-: 1 ~ 10VDC, or 10V PWM signal or resistance.
- Direct connecting to LEDs is suggested. It is not suitable to be used with additional drivers.
- Dimming source current from power supply: 100μA (typ.)

◎ Applying additive 1 ~ 10VDC

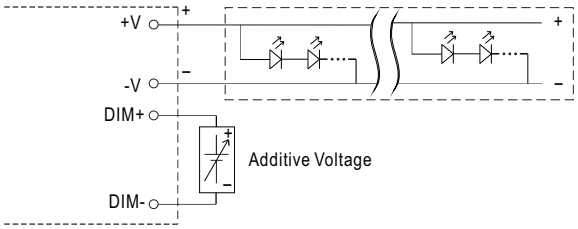

"DO NOT connect "DIM- to -V"

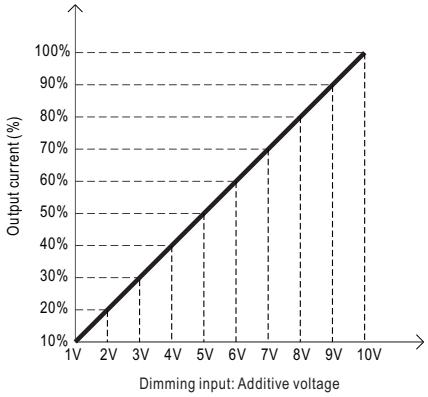

◎ Applying additive 10V PWM signal (frequency range 100Hz ~ 3KHz):

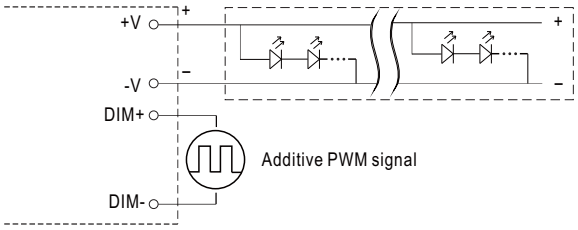

"DO NOT connect "DIM- to -V"

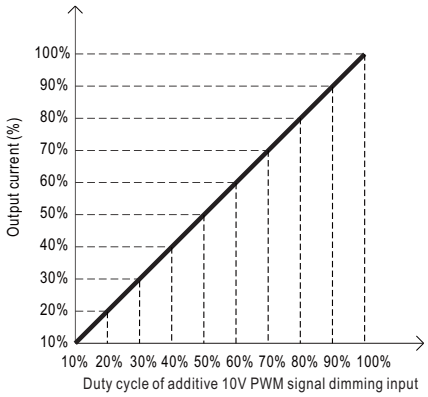

◎ Applying additive resistance:

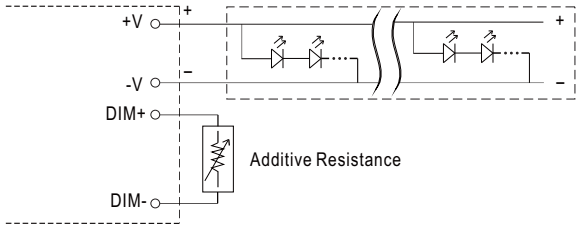

"DO NOT connect "DIM- to -V"

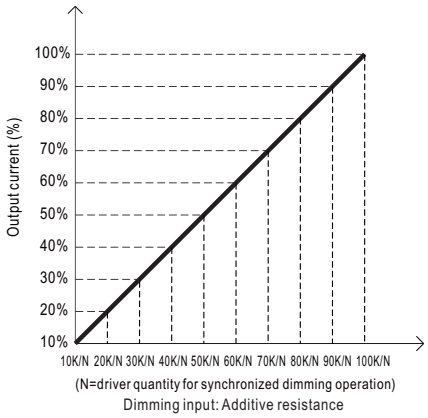

MeanWell Direct, Orion House, Calleva Park, Aldermaston, Berkshire, RG7 8SN
Tel: +44 (0)118 9703858 Email: sales@meanwelldirect.co.uk

Note: In the case of turning the lighting fixture down to 0% brightness, please refer to the configuration as follow, or please contact MEAN WELL for other options.

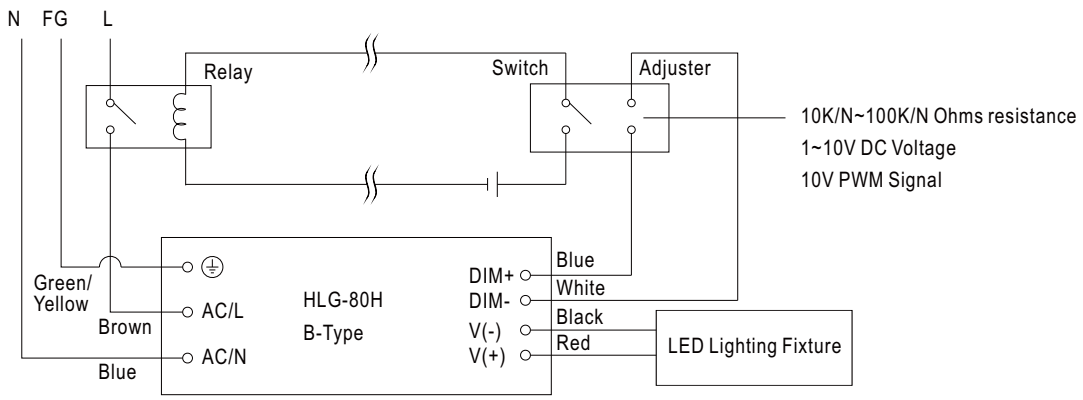

Using a switch and relay can turn ON/OFF the lighting fixture.

MeanWell Direct, Orion House, Calleva Park, Aldermaston, Berkshire, RG7 8SN
Tel: +44 (0)118 9703858 Email: sales@meanwelldirect.co.uk

■ OUTPUT LOAD vs TEMPERATURE

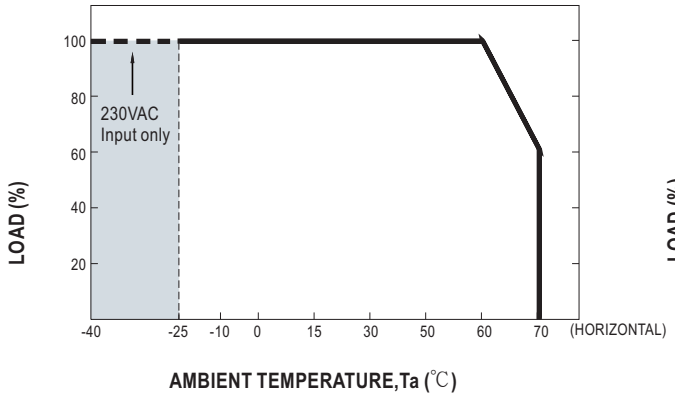

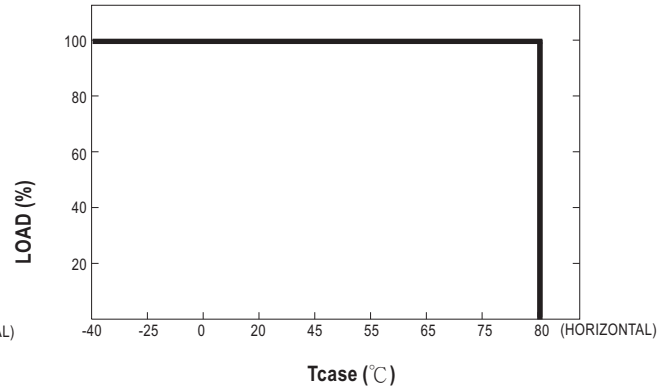

■ STATIC CHARACTERISTICS

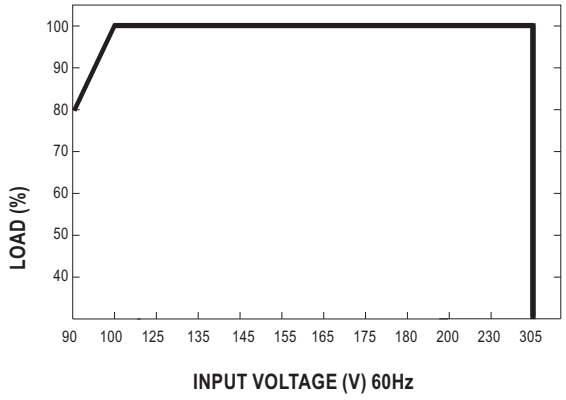

※ De-rating is needed under low input voltage.

■ POWER FACTOR(PF) CHARACTERISTIC

※Tcase at 70℃

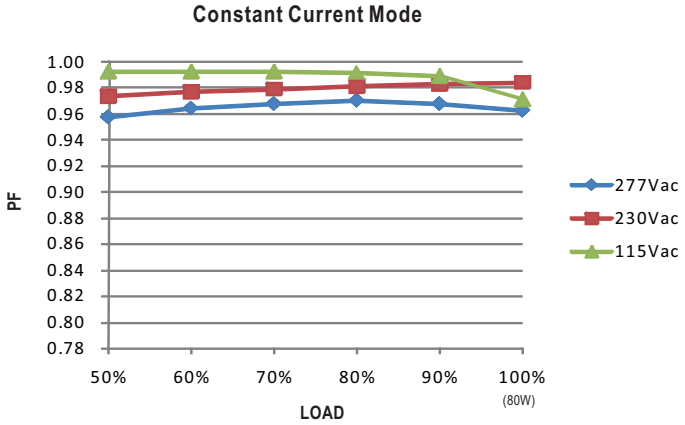

■ TOTAL HARMONIC DISTORTION (THD)

※ 48V Model, Tcase at 70℃

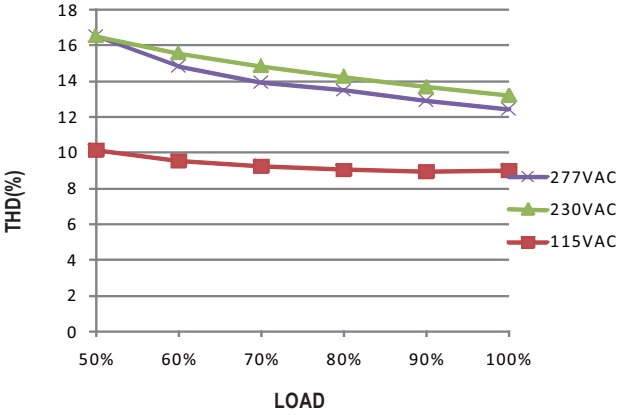

■ EFFICIENCY vs LOAD

HLG-80H series possess superior working efficiency that up to 91% can be reached in field applications.

※ 48V Model, Tcase at 70℃

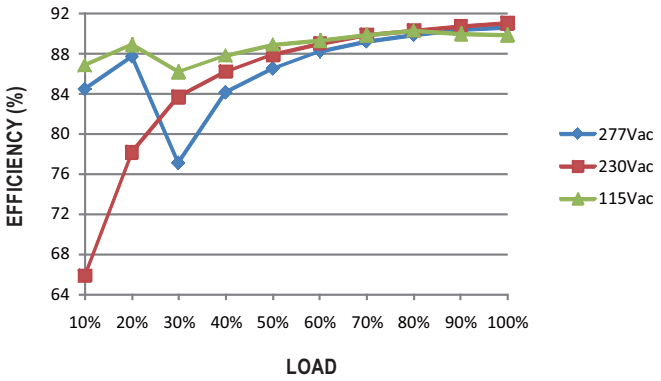

MeanWell Direct, Orion House, Calleva Park, Aldermaston, Berkshire, RG7 8SN
Tel: +44 (0)118 9703858 Email: sales@meanwelldirect.co.uk

■ LIFETIME

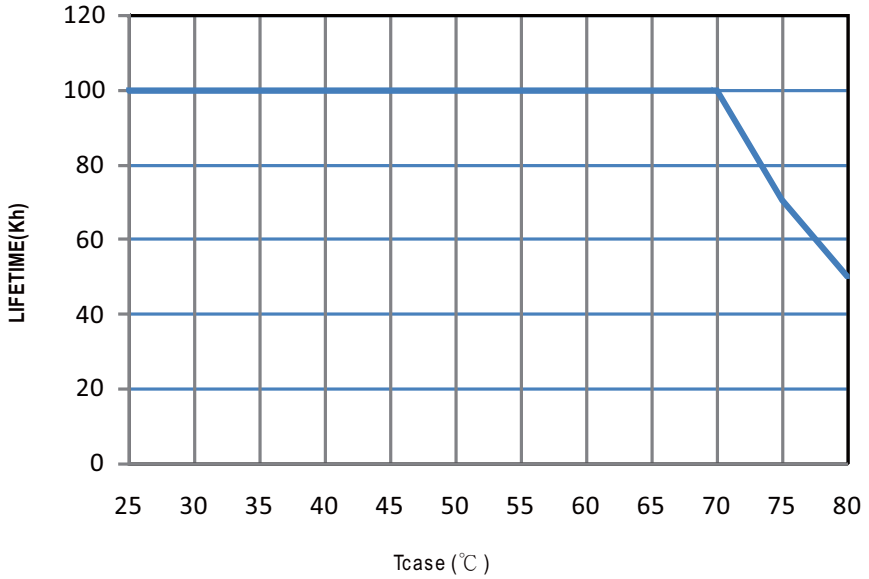

MeanWell Direct, Orion House, Calleva Park, Aldermaston, Berkshire, RG7 8SN
Tel: +44 (0)118 9703858 Email: sales@meanwelldirect.co.uk

■ MECHANICAL SPECIFICATION

Case No.997A Unit:mm

※**Blank/D-Type**

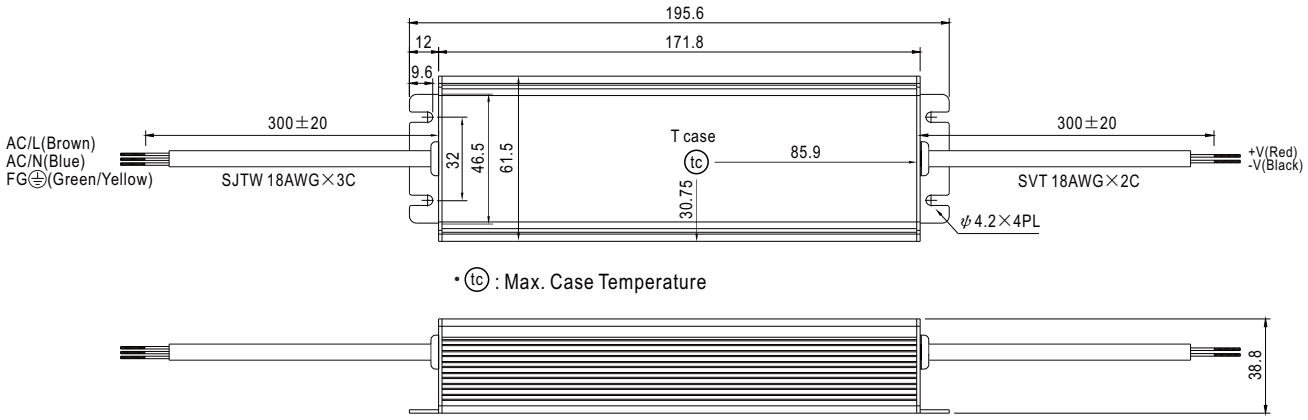

• tc : Max. Case Temperature

※**A-Type**

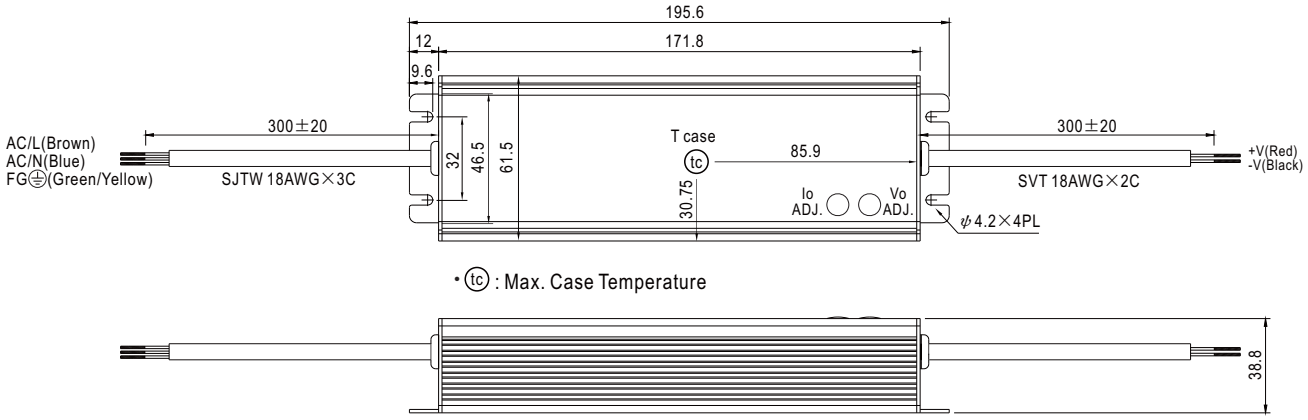

• tc : Max. Case Temperature

※**B-Type**

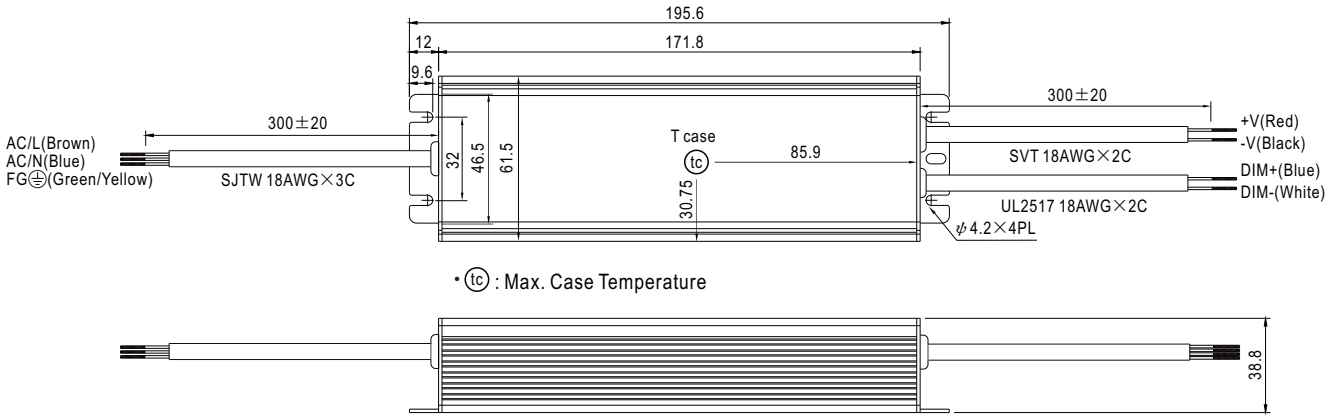

• tc : Max. Case Temperature

MeanWell Direct, Orion House, Calleva Park, Aldermaston, Berkshire, RG7 8SN
Tel: +44 (0)118 9703858 Email: sales@meanwelldirect.co.uk

■ WATERPROOF CONNECTION

※ **Waterproof connector**

Waterproof connector can be assembled on the output cable of HLG-80H to operate in dry/wet/damp or outdoor environment.

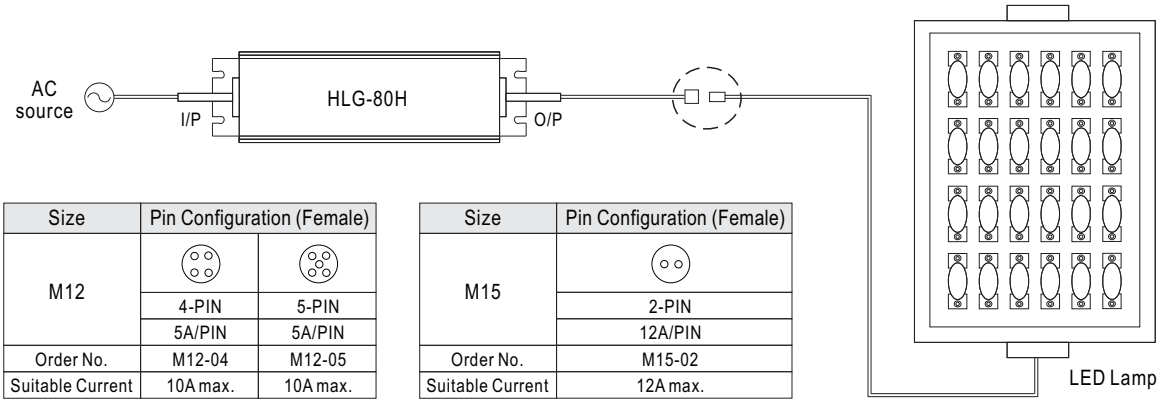

Size	Pin Configuration (Female)	
M12		
	4-PIN	5-PIN
	5A/PIN	5A/PIN
Order No.	M12-04	M12-05
Suitable Current	10A max.	10A max.

Size	Pin Configuration (Female)
M15	
	2-PIN
	12A/PIN
Order No.	M15-02
Suitable Current	12A max.

※ **Cable Joiner**

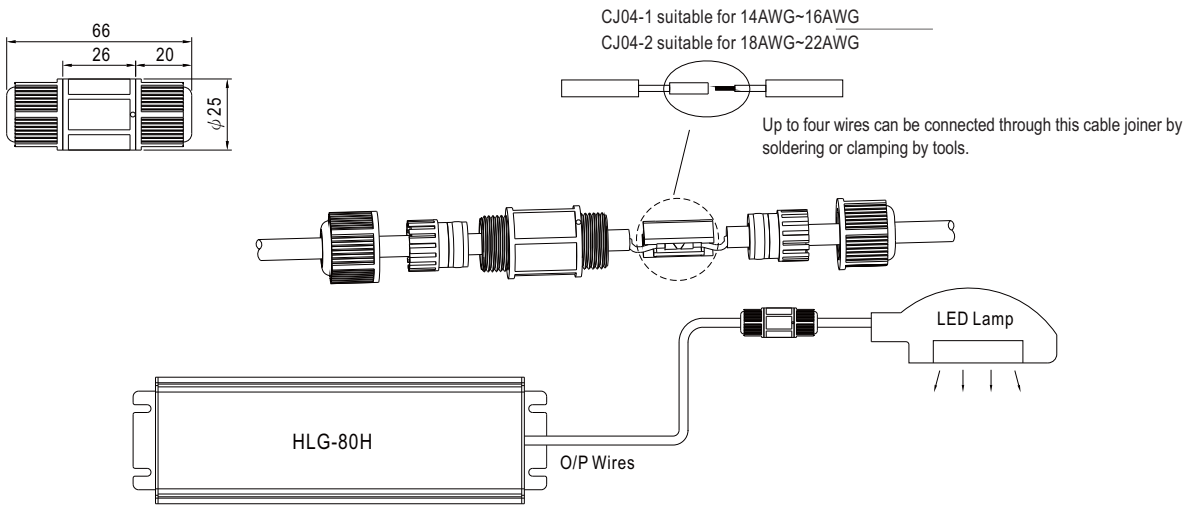

◎ CJ04 cable joiner can be purchased independently for user's own assembly.
MEAN WELL order No. : CJ04-1, CJ04-2.

※ **Junction Box Option**

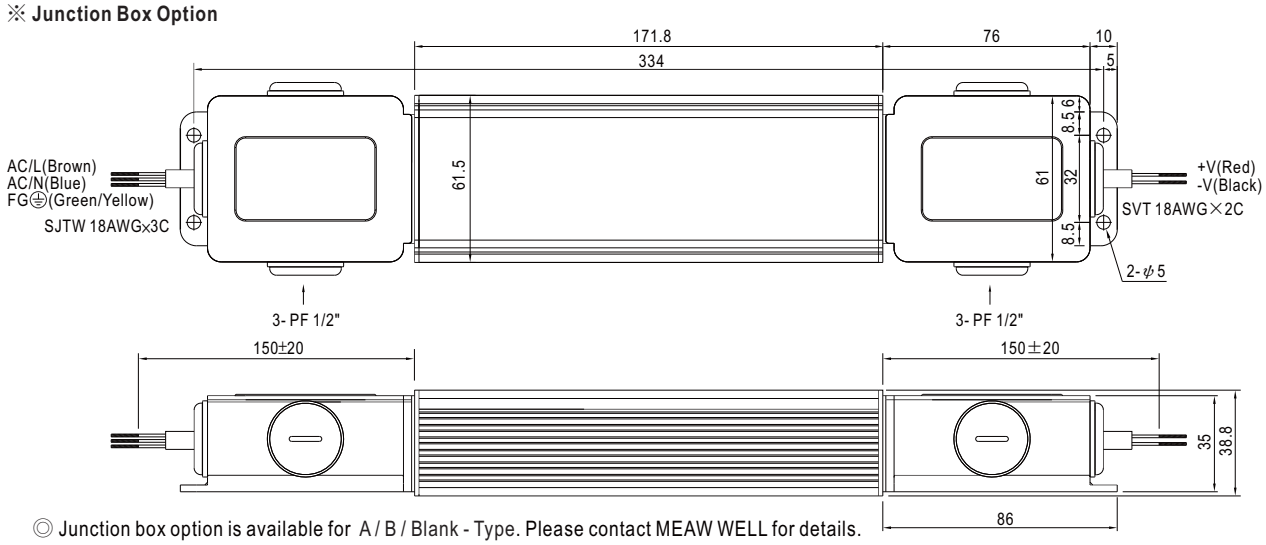

◎ Junction box option is available for A / B / Blank - Type. Please contact MEAW WELL for details.

◎ **HLG-80H-□BL models with junction box on both input and output sides are UL LISTED approved(modified by B type only).**

■ INSTALLATION MANUAL

Please refer to : http://www.meanwell.com/webnet/search/InstallationSearch.html